Tanco Autowrap - 1400
Parts List

Tanco Autowrap - 1400
Parts List

1. Chassis Assembly
1.1 Control Valve Mouting
1.2 Wheels & Mudguards
1.3 Chassis Bale Guide
1.4 Drawbar
1.5 Cut & Tie / Ram Mountings

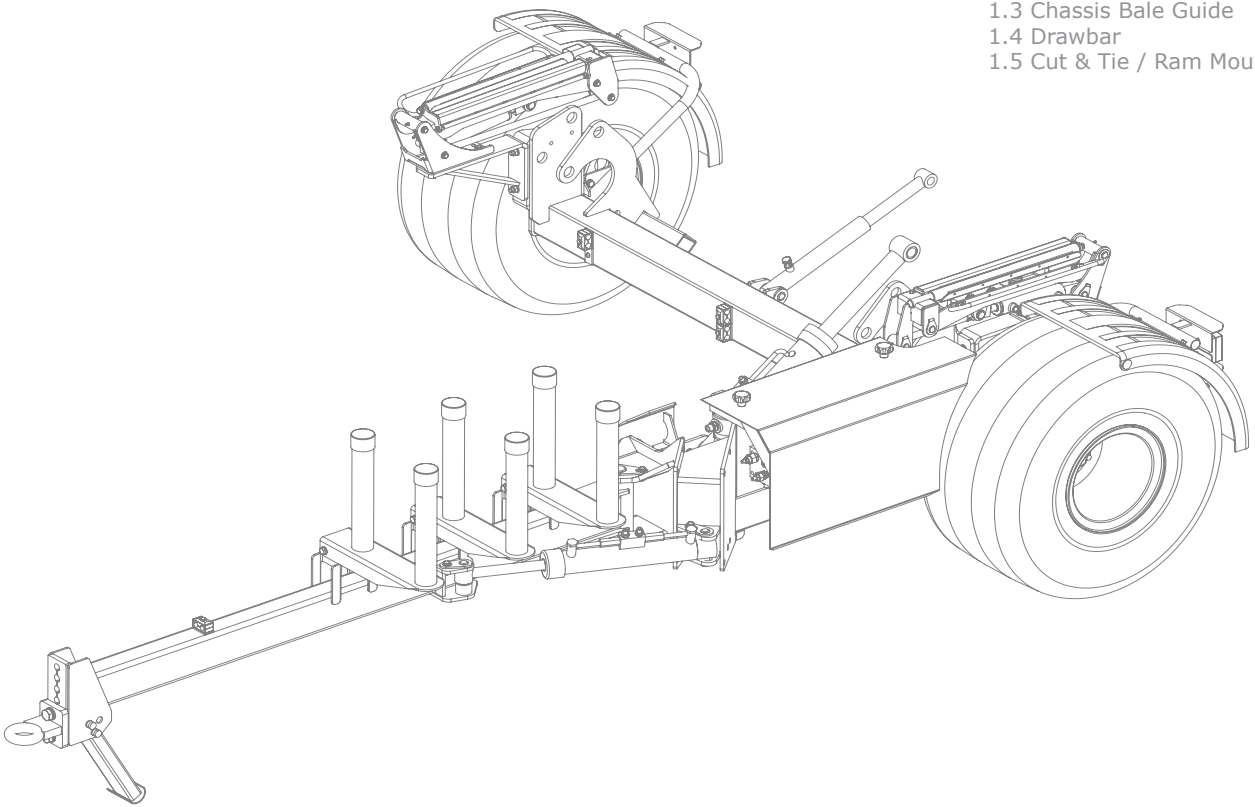

Tanco Autowrap - 1400
Parts List

1. Chassis Assembly
1.1 Control Valve Mouting
1.2 Wheels & Mudguards
1.3 Chassis Bale Guide
1.4 Drawbar
1.5 Cut & Tie / Ram Mountings

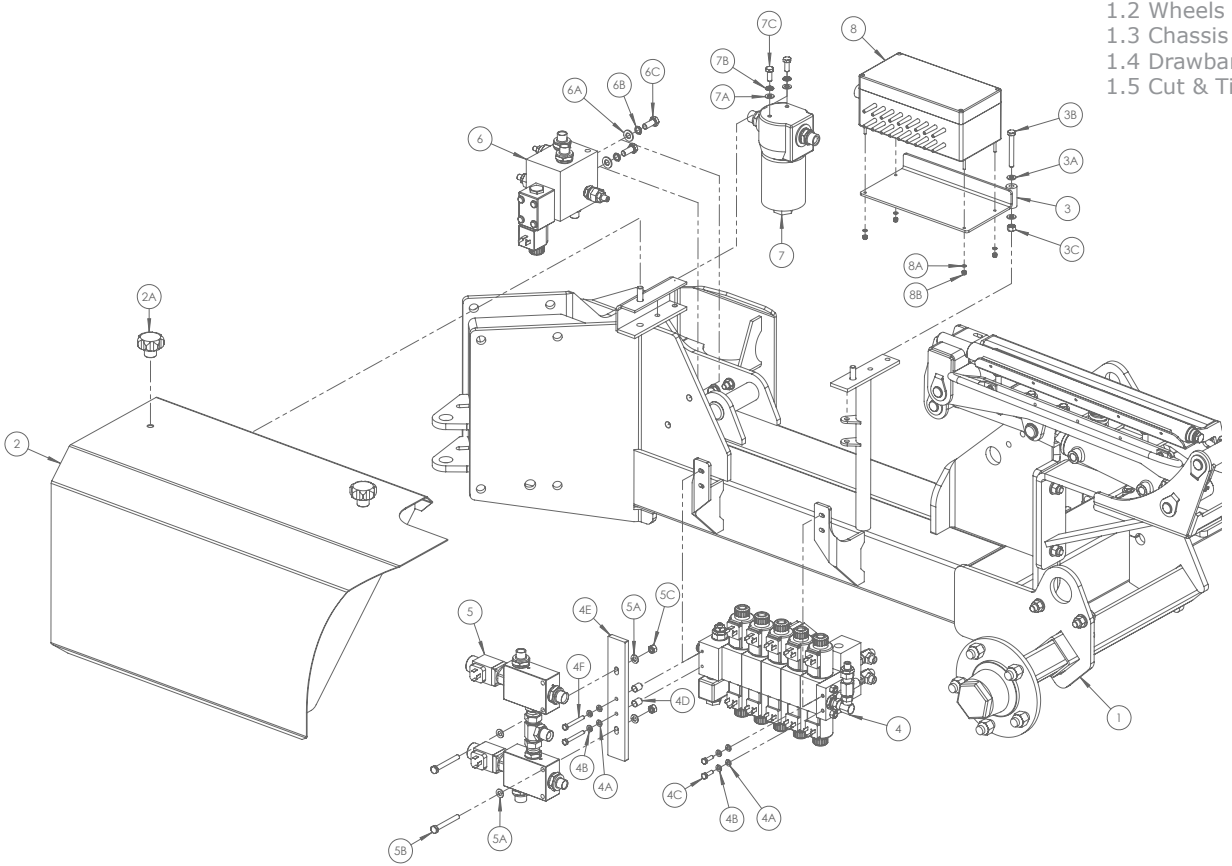

1.1 Control Valve Mounting

Item No.	Part No.	Description	Qty
1	1401100	Chassis	1
2	1401060	Valve Cover	1
2A	34251456	Handwheel (50 x 10)	2
3	1401050	Junction Box Mounting Bracket	1
3A	Z10-02-08	8mm Flat Washer	2
3B	Z26-048B	M8 x 65mm Hex Bolt	1
3C	Z23-08	8mm Locknut	1
4	1408100	Control Valve	1
4A	Z10-02-06	6mm Flat Washer	4
4B	Z12-02-06	6mm Spring Washer	4
4C	Z26-020S	M6 x 20mm Hex Set	2
4D	1403044	Valve Spacer	2
4E	1401066	Valve Mounting Bracket	1
4F	Z26-026B	M6 x 50mm Hex Bolt	2
5	1408200	Proportional Valve	1
5A	Z10-02-08	8mm Flat Washer	4
5B	Z26-048B	M8 x 65mm Hex Bolt	2
5C	Z23-08	8mm Locknut	2

Item No.	Part No.	Description	Qty
6	1308180	Tower Block	1
6A	Z10-02-10	10mm Flat Washer	2
6B	Z12-02-10	10mm Spring Washer	2
6C	Z26-0611S	M10 x 25mm Hex Set	2
7	1308070	Oil Pressure Filter	1
7A	Z10-02-08	8mm Flat Washer	2
7B	Z12-02-08	8mm Spring Washer	2
7C	Z26-039S	M8 x 20mm Hex Set	2
8	1409100	RDS Control Kit (Junction Box)	1
8A	Z10-02-04	4mm Flat Washer	2
8B	Z23-04	4mm Locknut	2

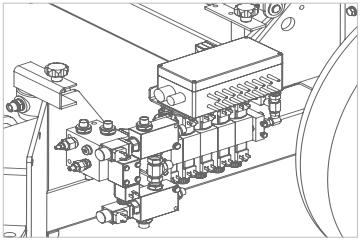

Tanco Autowrap - 1400
Parts List

1. Chassis Assembly
1.1 Control Valve Mouting
1.2 Wheels & Mudguards
1.3 Chassis Bale Guide
1.4 Drawbar
1.5 Cut & Tie / Ram Mountings

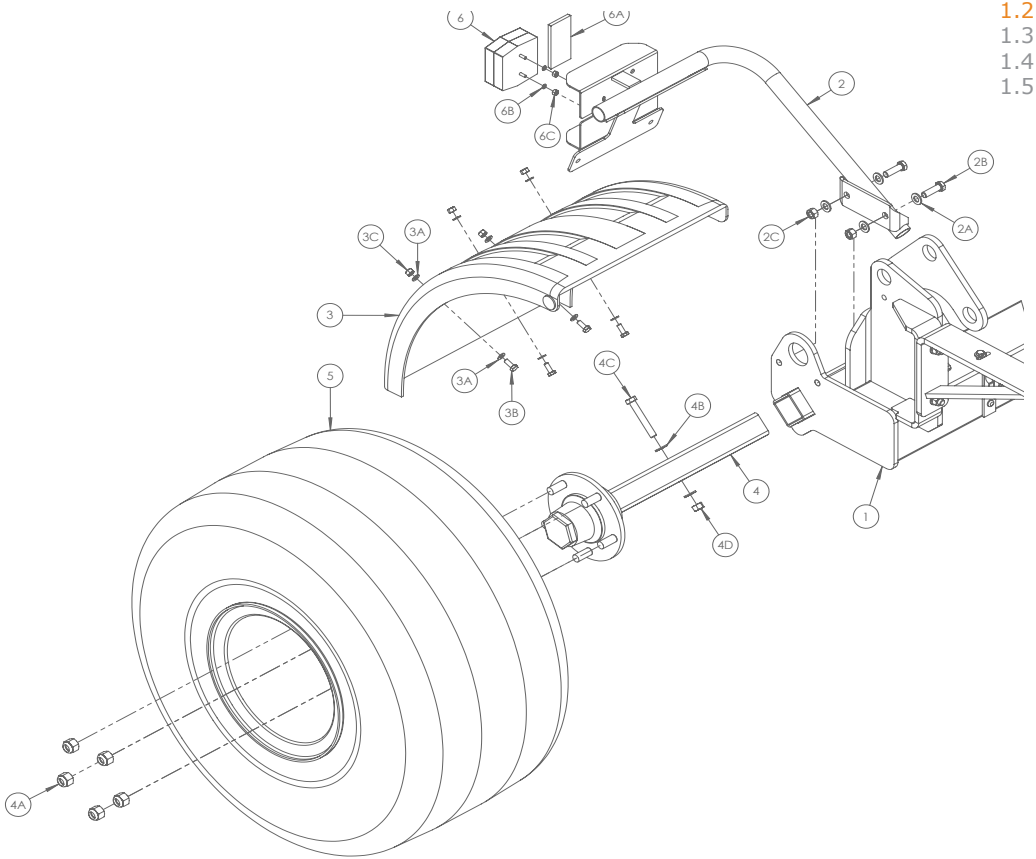

1.2 Wheels & Mudguards

Item No	Part No	Description	Qty
1	1401100	Chassis	1
2	1402100	Mud Guard Mounting Bracket (Right)	1
2A	Z10-02-12	12mm Flat Washer	4
2B	Z26-084S	M12 x 40mm Hex Set	2
2C	Z23-12	12mm Locknut	2
3	1401250	Plastic Mudguard	1
3A	Z10-02-08	8mm Flat Washer	8
3B	Z26-039S	M8 x 20mm Hex Set	4
3C	Z23-08	8mm Locknut	4
4	Z04-032	Stub Axle	1
4A	M22AWNA	M16 Wheel Nut	5
4B	Z10-02-12	12mm Flat Washer	2
4C	Z26-0901B	M12 x 80mm Hex Bolt	1
4D	Z23-12	12mm Locknut	1
5	Z04-04-1070	5 Stud Road Wheel	1

Item No	Part No	Description	Qty
6	Z05-30	Lighting Set	1
6A	Z04-621	100 x 45 Reflector	1
6B	Z10-02-05	5mm Flat Washer	2
6C	Z23-05	5mm Locknut	2

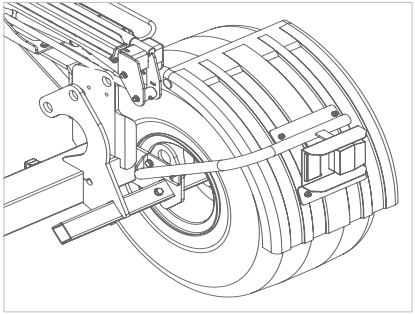

1. Chassis Assembly
1.1 Control Valve Mouting
1.2 Wheels & Mudguards
1.3 Chassis Bale Guide
1.4 Drawbar
1.5 Cut & Tie / Ram Mountings

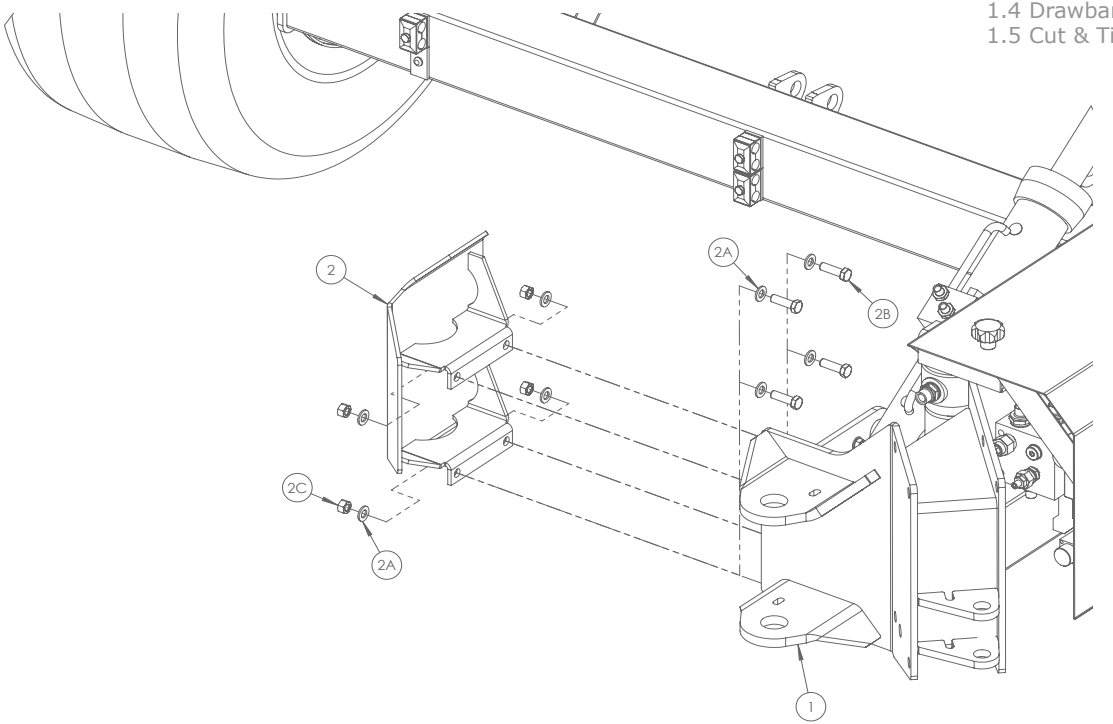

1.3 Chassis Bale Guide

Item No	Part No	Description	Qty
1	1401100	Chassis	1
2	1401070	Bale Guide	1
2A	Z10-02-10	12mm Flat Washer	8
2B	Z26-084S	M12 x 40mm Hex Set	4
2C	Z23-12	12mm Hex Set	4

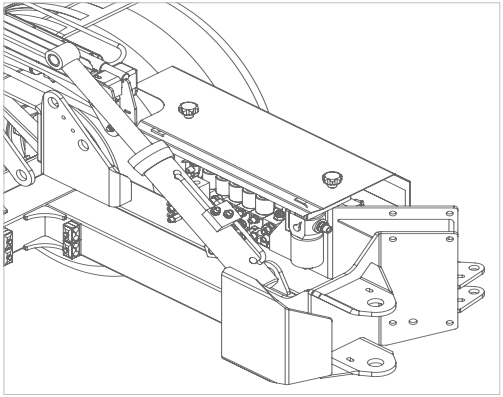

Tanco Autowrap - 1400
Parts List

1. Chassis Assembly
1.1 Control Valve Mouting
1.2 Wheels & Mudguards
1.3 Chassis Bale Guide
1.4 Drawbar
1.5 Cut & Tie / Ram Mountings

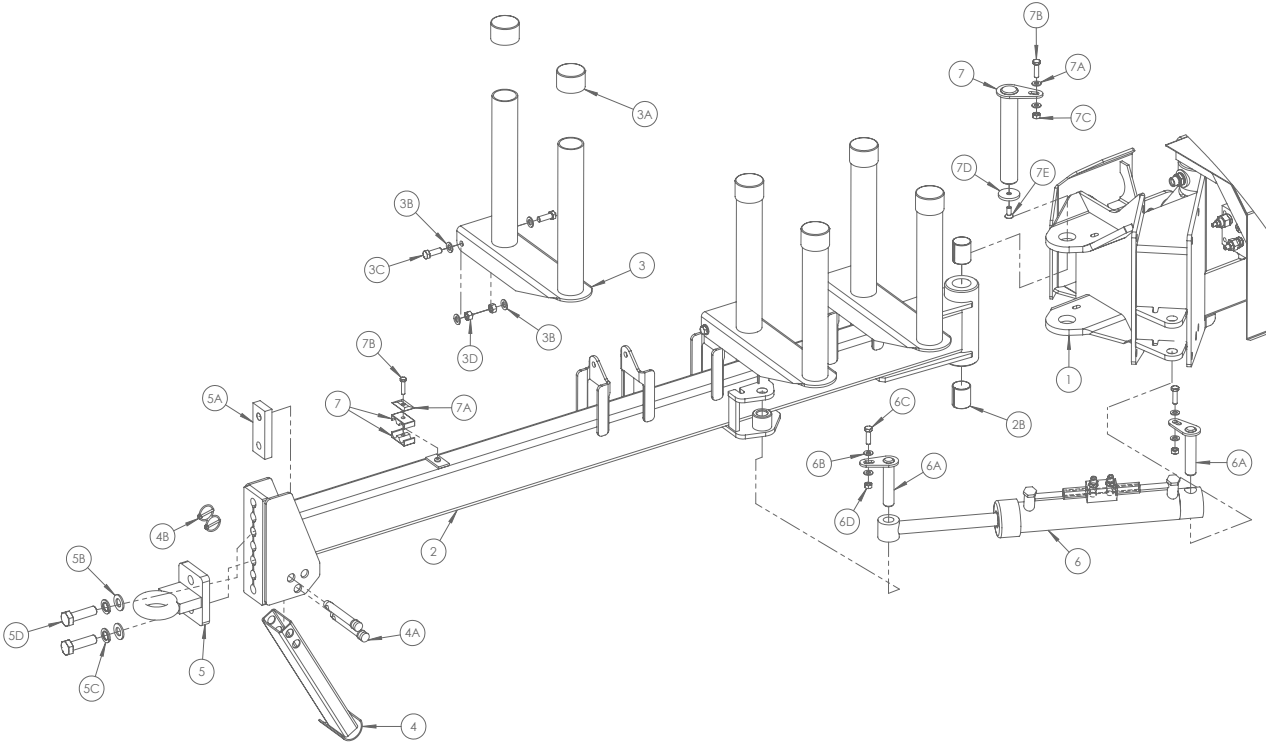

1.4 Drawbar

Item No	Part No	Description	Qty
1	1401100	Chassis	1
2	1401500	Drawbar	1
2A	34060800	M8 x 1.25 Grease Nipple	1
2B	1404056	DX Bush (40mm Bore x 50mm)	2
3	1408015	Film Roll Holder	3
3A	Z32-085	External Tube Cap	6
3B	Z10-02-12	M12 Flat Washer	12
3C	Z26-038B	M12 x 35mm Hex Bolt	6
3D	Z23-12	M12 Locknut	6
4	1401075	Drawbar Leg	1
4A	Z03-04-74	Link Pin	2
4B	Z03-22-03	1/4" Linch Pin	2
5	1401600	Hitch Eye	1
5A	1403005	Bolt Plate	1
5B	Z10-02-20	M20 Flat Washer	2
5C	Z12-02-20	M20 Spring Washer	2
5D	Z26-165B	M20 x 70mmHex Bolt	2

Item No	Part No	Description	Qty
6	1408166	Drawbar Ram	1
6A	1401716	Ram Mounting Pin	2
6B	Z10-02-10	M10 Flat Washer	4
6C	Z26-063S	M10 x 35mm Hex Set	2
6D	Z23-10	M10 Locknut	2
7	Z01-24-2618	18mm Pipe Clamp (Pair)	1
7A	Z01-24-27	Pipe Clamp Top Plate	1
7B	Z26-042B	M8 x 35mm Hex Bolt	1
8	1401713	Drawbar Pivot Pin	1
8A	Z26-063S	M10 x 35mm Hex Set	1
8B	Z10-02-10	M10 Flat Washer	2
8C	Z23-10	M10 Locknut	1
8D	1403033	Countersunk Pin Cap	1
8E	Z13-5-10X25	M10 x 25mm CSK Allen Set	1

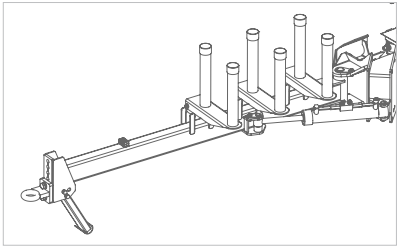

1. Chassis Assembly
1.1 Control Valve Mouting
1.2 Wheels & Mudguards
1.3 Chassis Bale Guide
1.4 Drawbar
1.5 Cut & Tie / Ram Mountings

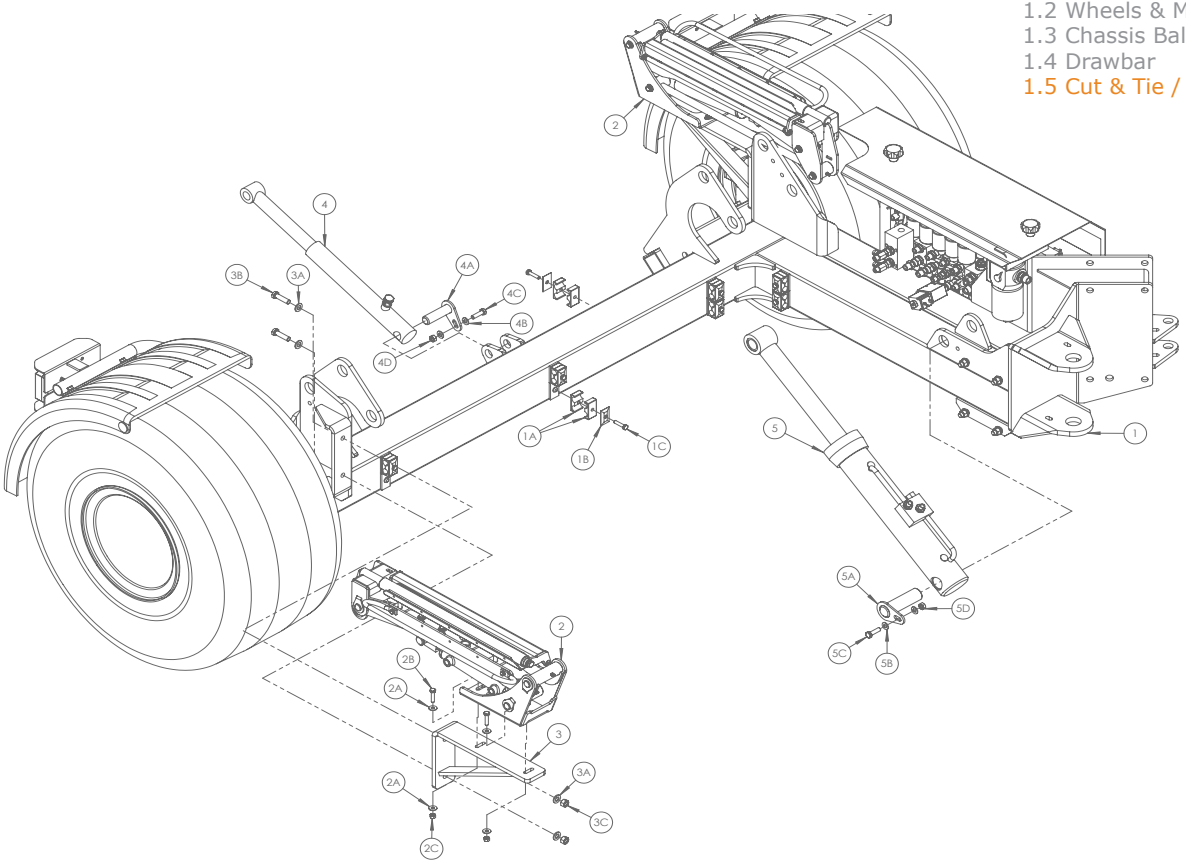

1.5 Cut & Tie / Ram Mountings

Item No	Part No	Description	Qty
1	1401100	Chassis	1
1A	Z01-24-2618	18mm Pipe Clamp (Pair)	7
1B	Z01-24-27	Pipe Clamp Top Plate	7
1C	Z26-042B	M8 x 35mm Hex Bolt	7
2	1406100	Professional Cut & Tie	2
2A	Z11-02-081	8mm Mudwasher	8
2B	Z26-042S	M8 x 35mm Hex Set	4
2C	Z23-08	8mm Locknut	4
3	1401086	Cut & Tie Mounting Bracket	2
3A	Z10-02-12	12mm Flat Washer	8
3B	Z26-085S	M12 x 45mm Hex Set	4
3C	Z23-12	12mm Locknut	4
4	1408169	Unloading Damper Ram	1
4A	1401720	Ram Mounting Pin	1
4B	Z10-02-10	10mm Flat Washer	1
4C	Z26-063S	M10 x 35mm Hex Set	1
4D	Z23-08	10mm Locknut	1

Item No	Part No	Description	Qty
5	1408167	Table Loading Ram	1
5A	1401710	Ram Mounting Pin	1
5B	Z10-02-10	10mm Flat Washer	1
5C	Z26-063S	M10 x 35mm Hex Set	1
5D	Z23-08	10mm Locknut	1

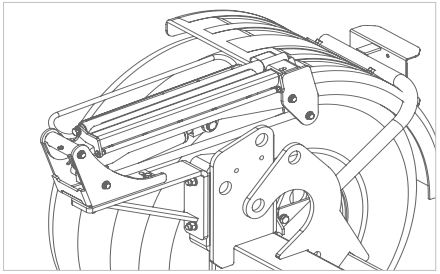

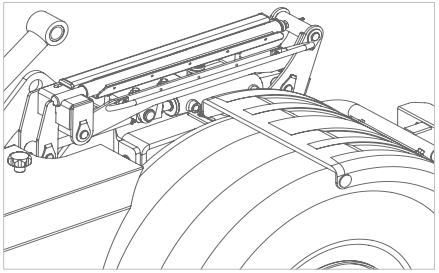

2. Professional Cut & Tie Assembly
2.1 Cut & Tie Base Asseembly
2.2 Cut & Tie Pressure Arm Assembly
2.3 Cut & Tie Top Arm Assembly

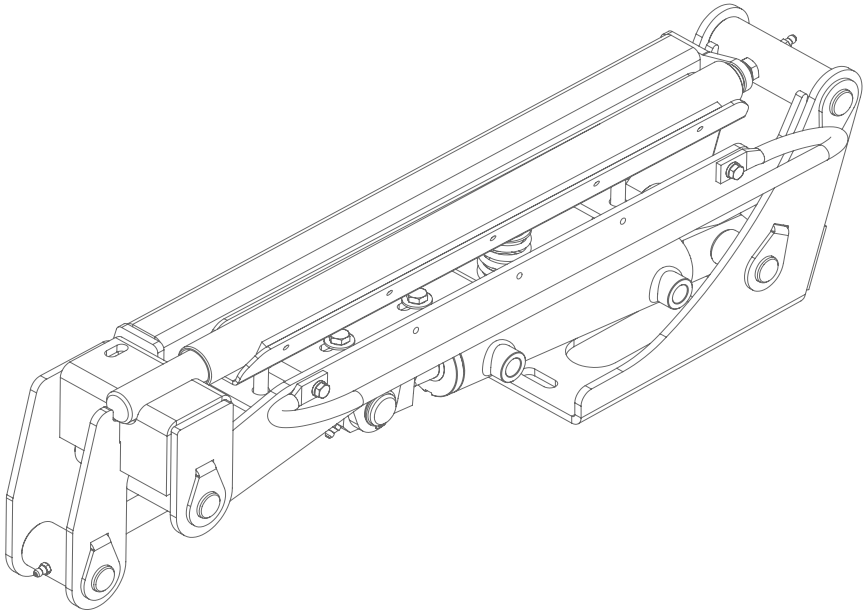

2. Professional Cut & Tie Assembly
2.1 Cut & Tie Base Assembly
2.2 Cut & Tie Pressure Arm Assembly
2.3 Cut & Tie Top Arm Assembly

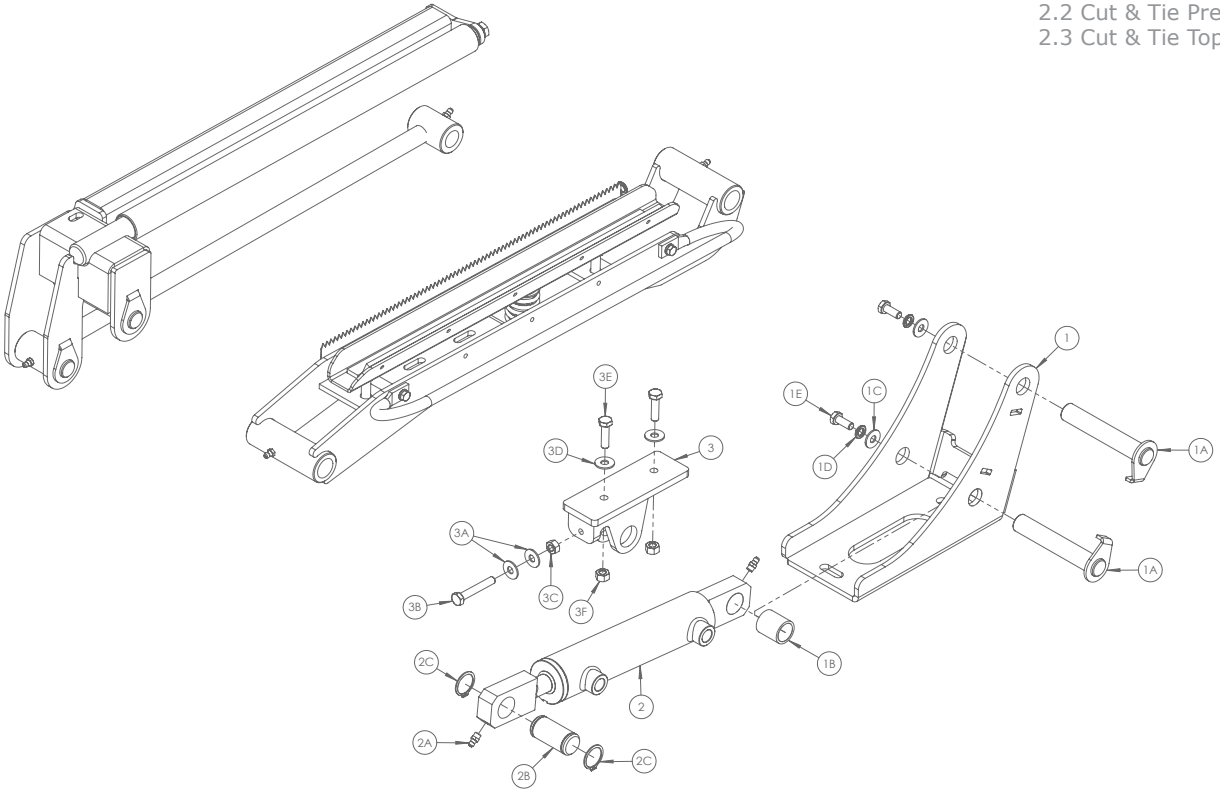

2.1 Cut & Tie Base Assembly

Item No	Part No	Description	Qty
1	1406060	Cut & Tie Base	1
1A	1406080	Cut & Tie Pin (Long)	2
1B	1406035	Ram Spacer	1
1C	Z11-02-081	8mm Mud Washer	2
1D	Z12-02-08	8mm Spring Washer	2
1E	Z26-039S	M8 x 20mm Hex Set	2
2	1308151	Cut & Tie Ram	1
2A	34060800	M8 x 1.25 Grease Nipple	2
2B	34105631	Ram Mounting Pin	1
2C	Z28-525	M25 External Circlip	2
3	34920525	Cut & Tie Casting	1
3A	Z11-02-081	8mm Mud Washer	2
3B	Z26-045S	M8 x 50mm Hex Set	1
3C	Z18-08	8mm Plain Hex Nut	1
3D	Z11-02-081	8mm Mud Washer	2
3E	Z26-041S	M8 x 30mm Hex Set	2
3F	Z23-08	8mm Hex Nut	2

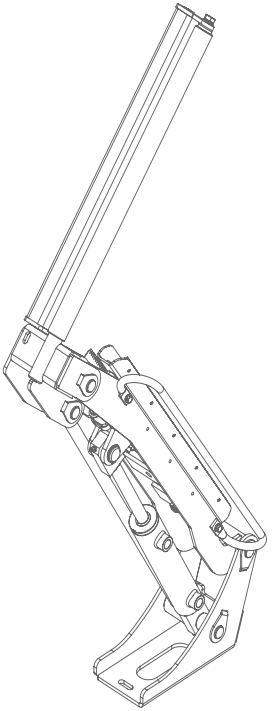

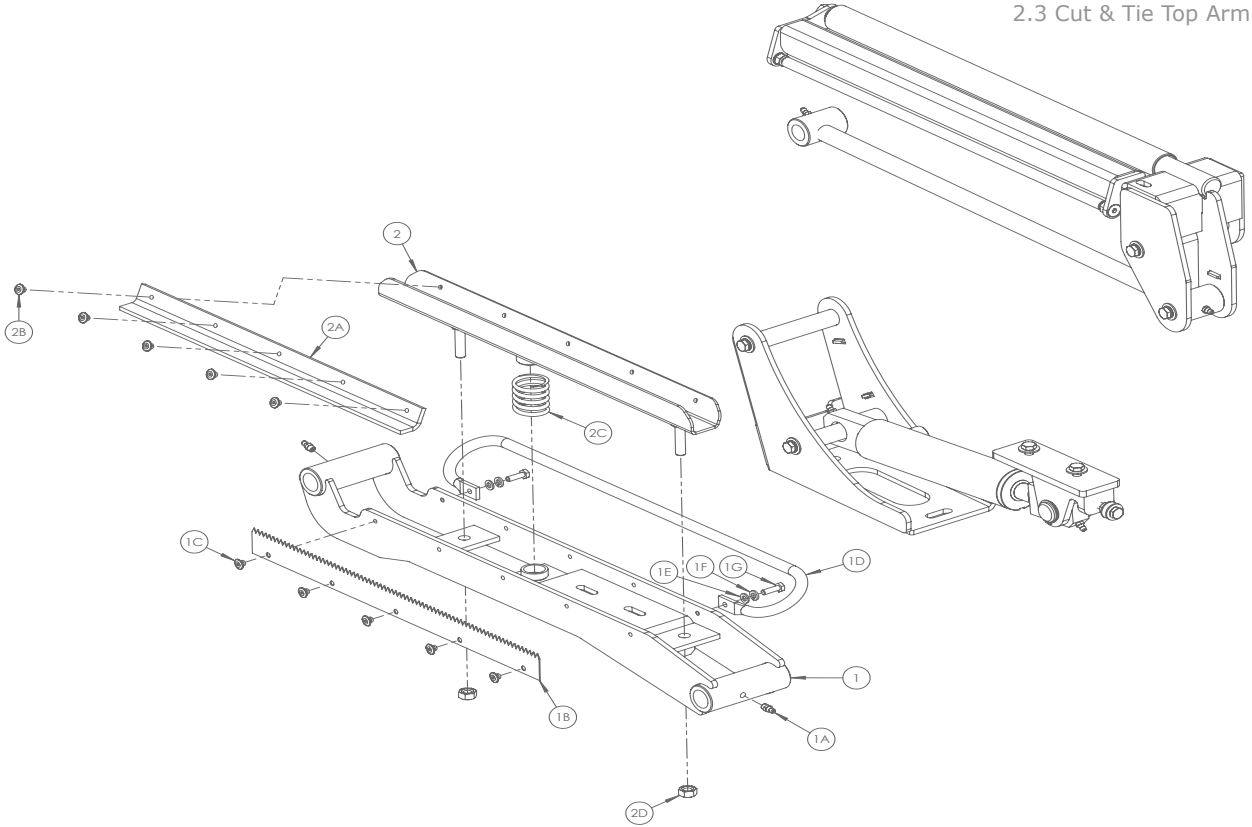
2
2B
2A
2C
1C
1E
1F
1G
1D
1
1B
1A
2D

2.2 Cut & Tie Pressure Arm Assembly

Item No	Part No	Description	Qty
1	1406112	Cut & Tie Lift Arm	1
1A	34060800	M8 x 1.25 Grease Nipple	2
1B	1406074	Cut & Tie Balde	1
1C	Z03-25-05	Pop Rivet	5
1D	1406075	Film Gathering Bar	1
1E	Z10-02-06	6mm Flat Washer	2
1F	Z12-02-06	6mm Spring Washer	2
1G	Z26-020S	M6 x 20mm Hex Set	2
2	1406101	Pressure Plate	1
2A	1406706	Rubber Strip	1
2B	Z03-25-05	Pop Rivet	5
2C	1406078	Pressure Spring	1
2D	Z23-10	10mm Locknut	2

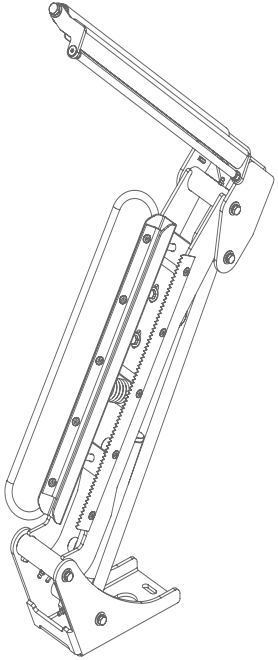

2. Professional Cut & Tie Assembly
2.1 Cut & Tie Base Assembly
2.2 Cut & Tie Pressure Arm Assembly
2.3 Cut & Tie Top Arm Assembly

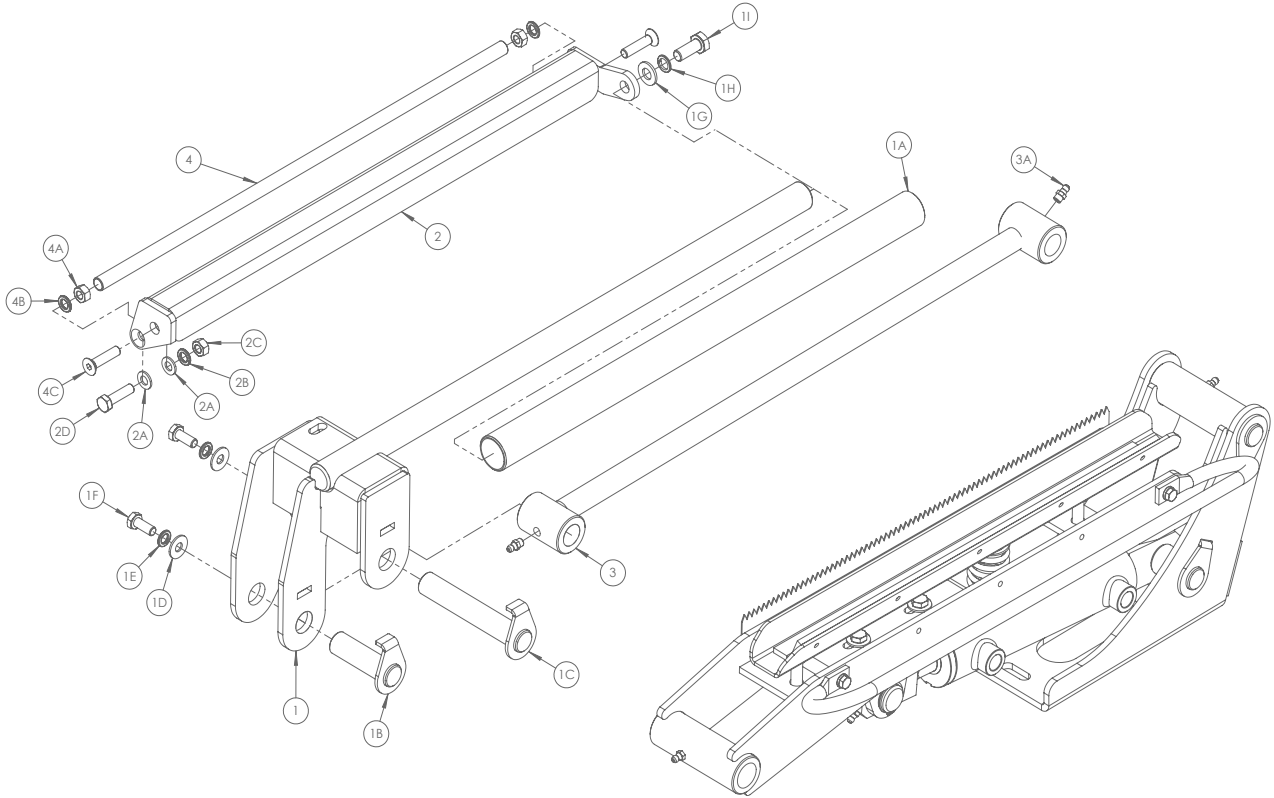

2.2 Cut & Tie Top Arm Assembly

Item No	Part No	Description	Qty
1	1406113	Pull Down Arm	1
1A	1406077	Knurled Roller	1
1B	1406085	Cut & Tie Pin (Short)	1
1C	1406080	Cut & Tie Pin (Long)	1
1D	Z11-02-081	8mm Mud Washer	2
1E	Z12-02-08	8mm Spring Washer	2
1F	Z26-039S	M8 x 20mm Hex Set	2
1G	Z10-02-10	10mm Flat Washer	1
1H	Z12-02-10	10mm Spring Washer	1
1I	Z26-0611S	M10 x 25mm Hex Set	1
2	1406065	Top Arm	1
2A	Z10-02-08	8mm Flat Washer	2
2B	Z12-02-08	8mm Spring Washer	2
2C	Z18-08	8mm Plain Hex Nut	1
2D	Z26-041S	M8 x 30mm Hex Set	1
3	1406102	Connecting Arm	1
3A	34060800	M8 x 1.25 Grease Nipple	2

Item No	Part No	Description	Qty
4	1406068	Film Roller	1
4A	Z18-08	8mm Plain Hex Nut	2
4B	Z12-02-08	8mm Spring Washer	2
4C	Z13-5-08X35	M8 x 35mm CSK AH Set	2

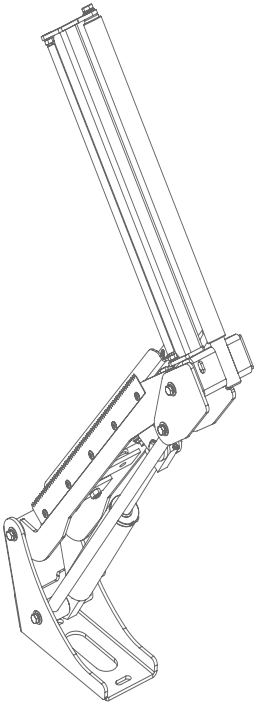

3. Table Assermbly
3.1 Chain Drive
3.2 Roller / Bearing Covers
3.3 Front Belt Guides
3.4 Rear Belt Guides
3.5 Bale Rollers
3.6 Table Pins (1)
3.7 Table Pins (2)
3.8 Loading Arm

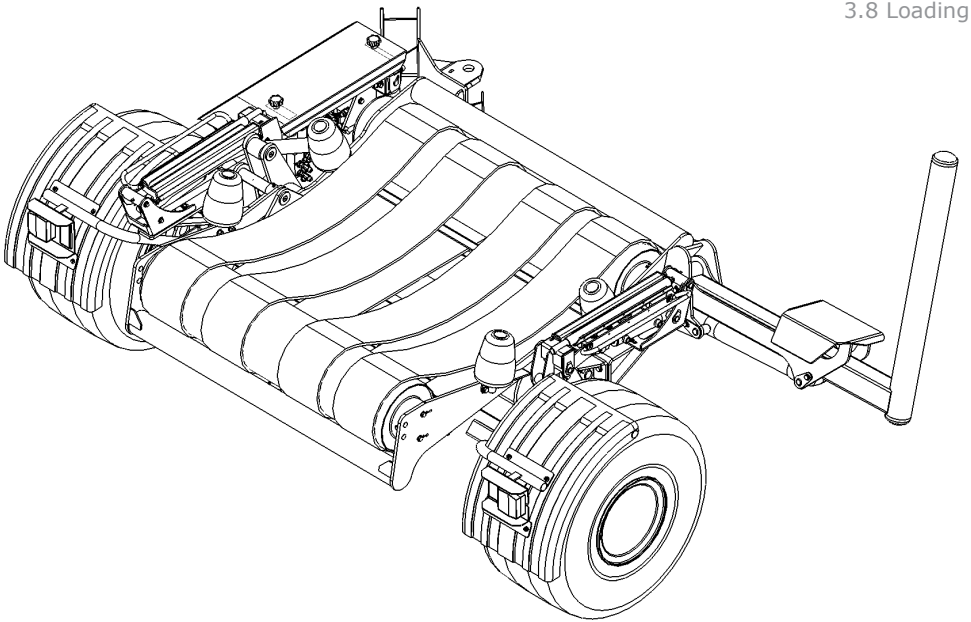

3. Table Assermbly
3.1 Chain Drive
3.2 Roller / Bearing Covers
3.3 Front Belt Guides
3.4 Rear Belt Guides
3.5 Bale Rollers
3.6 Table Pins (1)
3.7 Table Pins (2)
3.8 Loading Arm

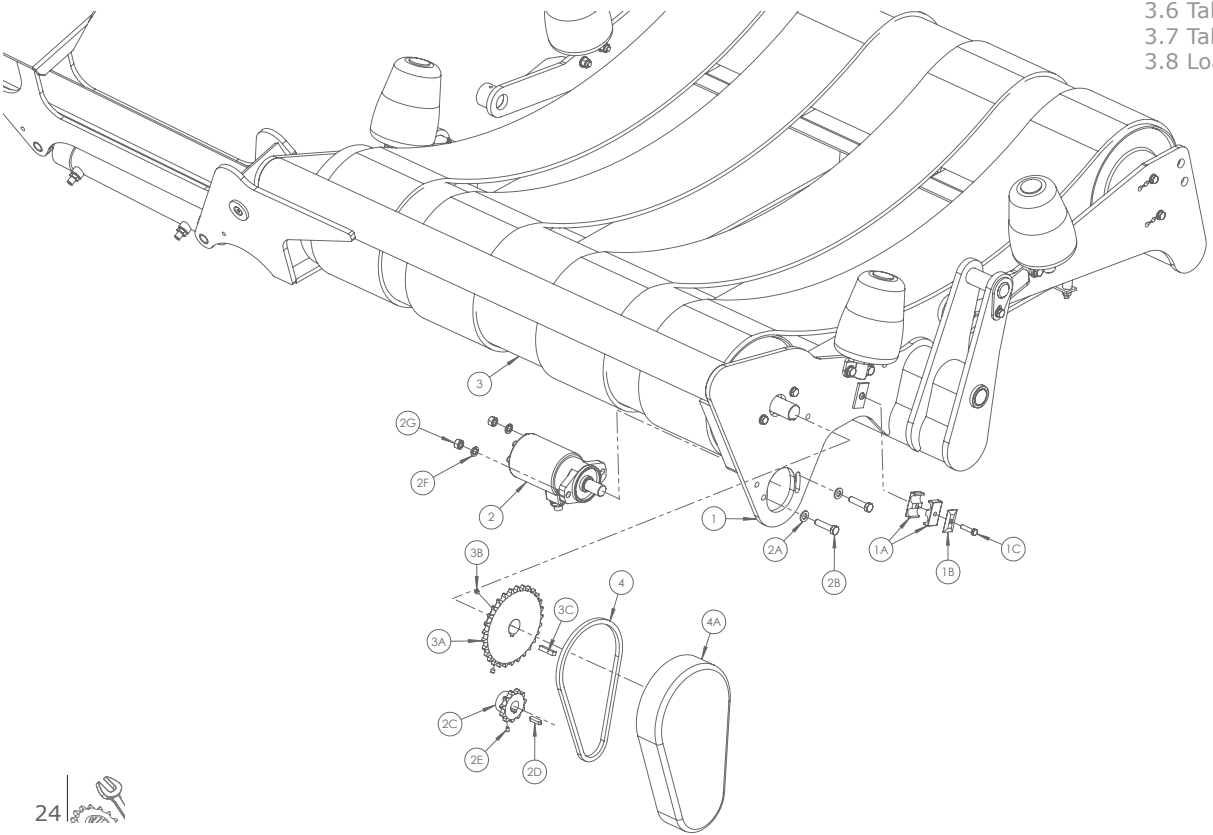

3.1 Chain Drive

Item No	Part No	Description	Qty
1	1403300	Table - Load Frame	1
1A	Z01-24-2618	18mm Pipe Clamp (Pair)	1
1B	Z01-24-27	Pipe Clamp Top Plate	1
1C	Z26-042B	M8 x 35mm Hex Bolt	1
2	1508800	Roller Drive Motor	1
2A	Z10-02-12	M12 Flat Washer	2
2B	Z26-084S	M12 x 40mm Hex Set	2
2C	1502098	11 Tooth 3/4" Sprocket	1
2D	34270111	8mm x 7mm x 30mm Key Steel	1
2E	Z28-008	M8 x 10mm Grub Screw	1
2F	Z12-02-12	M12 Spring Washer	2
2G	Z23-12	M12 Locknut	2
3	1403100	Drive Roller	1
3A	1403041	29 Tooth 3/4" Sprocket	1
3B	1403045	10mm x 8mm x 40mm Key Steel	1
3C	Z28-008	M8 x 10mm Grub Screw	2
4	34810834	3/4" Chain (33 3/4" Long)	1
4A	1403350	Sprocket & Chain Guard	1

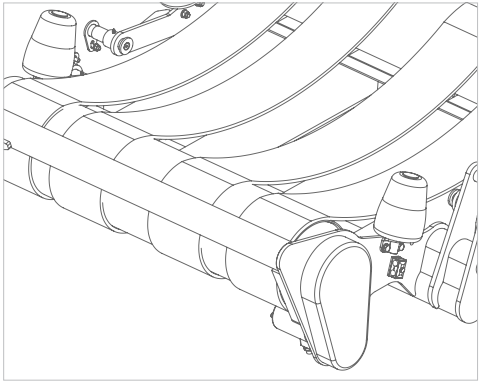

3. Table Assermbly
3.1 Chain Drive
3.2 Roller / Bearing Covers
3.3 Front Belt Guides
3.4 Rear Belt Guides
3.5 Bale Rollers
3.6 Table Pins (1)
3.7 Table Pins (2)
3.8 Loading Arm

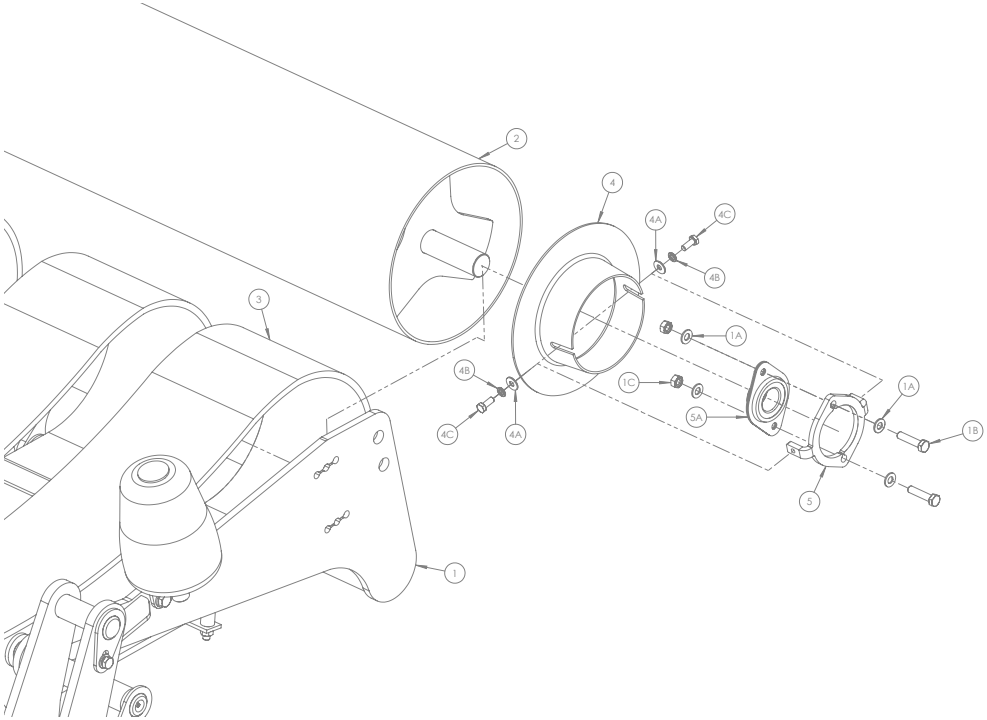

3.2 Roller / Bearing Covers

Item No	Part No	Description	Qty
1	1403450	Table - Unload Frame	1
1A	Z10-02-10	M10 Flat Washer	4
1B	Z26-065S	M10 x 45mm Hex Set	2
1C	Z23-10	M10 Locknut	2
2	1403108	Idler Roller	1
3	Z05-02-ILS	3265 X 200 (VEB) Strip Belt	4
4	1403125	Roller / Bearing Guard	1
4A	Z11-02-081	M8 Mudwasher	2
4B	M12-02-08	M8 Spring Washer	2
4C	Z26-039S	M8 X 20mm Hex Set	2
5	1403013	Bearing Cover Mounting Bracket	1
5A	1804101	Bearing - SA207 (w/ Cam Lock & Housing)	1

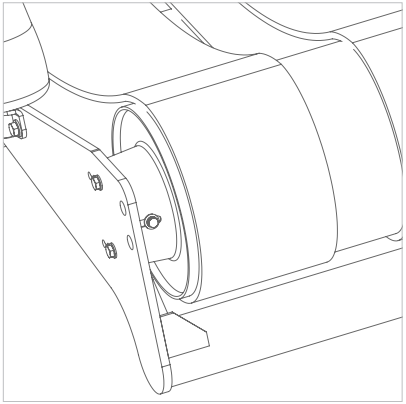

3. Table Assermbly
3.1 Chain Drive
3.2 Roller / Bearing Covers
3.3 Front Belt Guides
3.4 Rear Belt Guides
3.5 Bale Rollers
3.6 Table Pins (1)
3.7 Table Pins (2)
3.8 Loading Arm

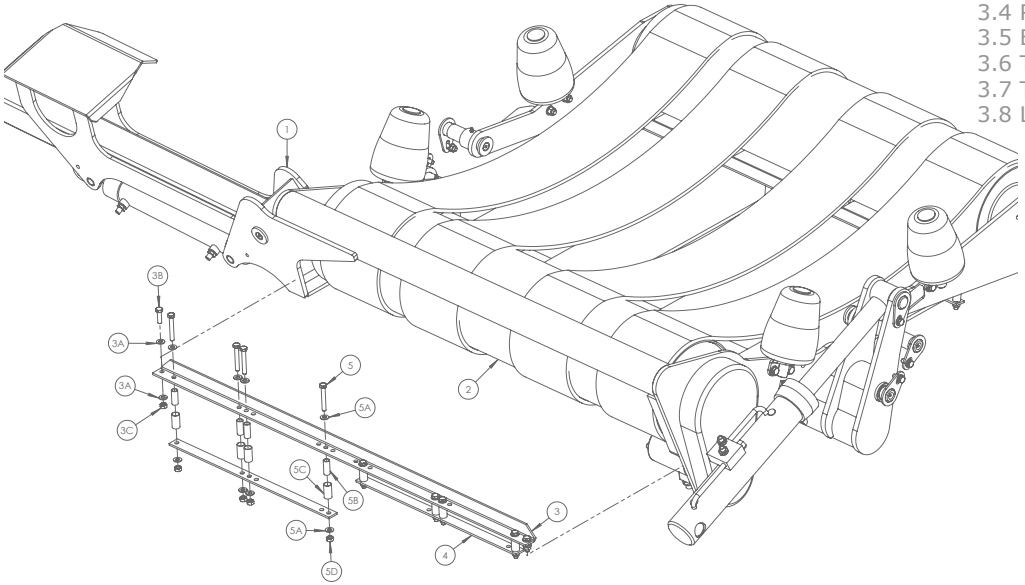

3.3 Front Belt Guides

Item No	Part No	Description	Qty
1	1403300	Table - Load Frame	1
2	1403100	Drive Roller	1
3	1403561	Belt Guide Top Profile	1
3A	Z10-02-10	M10 Flat Washer	4
3B	Z26-063S	M10 x 35mm Hex Set	2
3C	Z23-10	M10 Locknut	2
4	1403562	Belt Guide Bottom Profile	2
5	Z26-068B	M10 x 70mm Hex Bolt	8
5A	Z10-02-10	M10 Flat Washer	16
5B	1403565	Belt Guide Inner Roller (Short)	8
5C	1403566	Belt Guide Outer Roller (Short)	8
5D	Z23-10	M10 Locknut	8

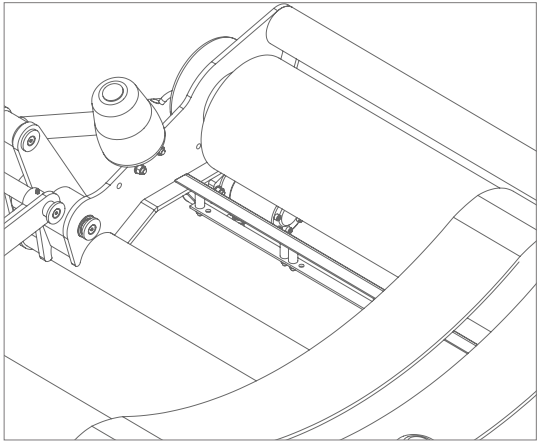

3. Table Assermbly
3.1 Chain Drive
3.2 Roller / Bearing Covers
3.3 Front Belt Guides
3.4 Rear Belt Guides
3.5 Bale Rollers
3.6 Table Pins (1)
3.7 Table Pins (2)
3.8 Loading Arm

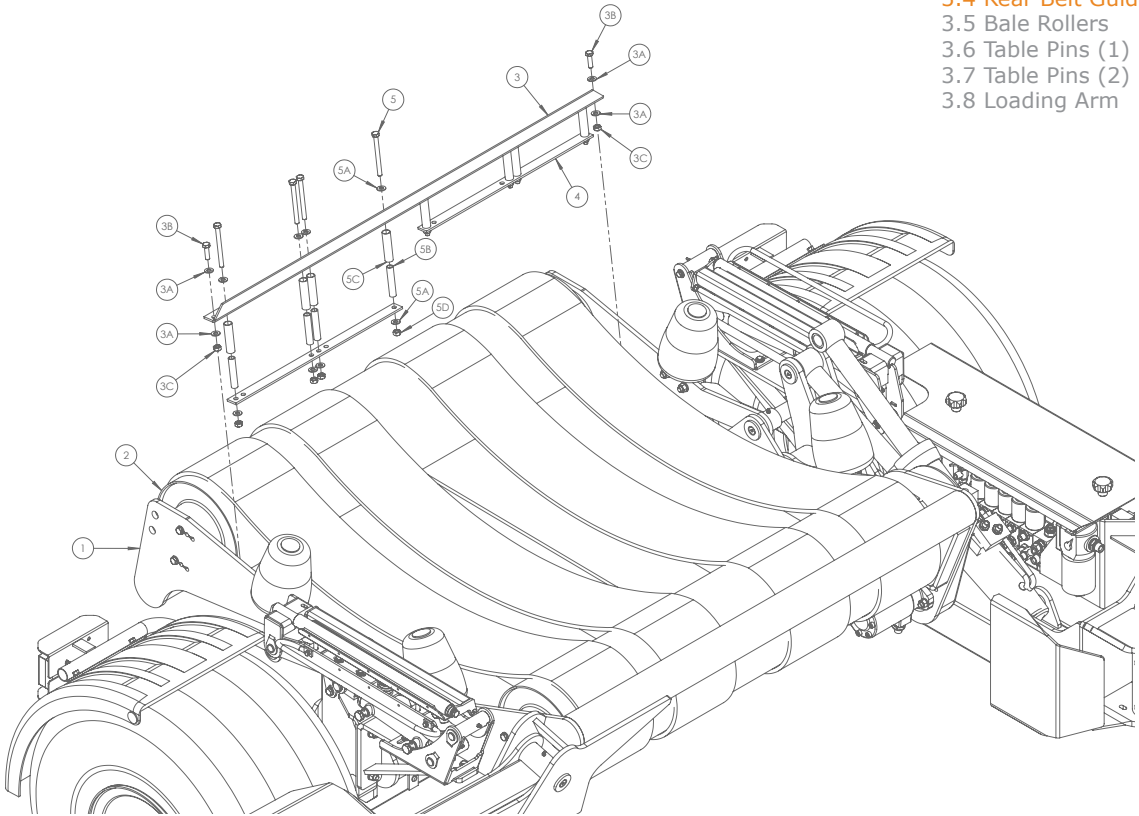

3.4 Rear Belt Guides

Item No	Part No	Description	Qty
1	1403450	Table - Unload Frame	1
2	1403108	Idler Roller	1
3	1403561	Belt Guide Top Profile	1
3A	Z10-02-10	M10 Flat Washer	4
3B	Z26-063S	M10 x 35mm Hex Set	2
3C	Z23-10	M10 Locknut	2
4	1403562	Belt Guide Bottom Profile	2
5	Z26-072B	M10 x 110mm Hex Bolt	8
5A	Z10-02-10	M10 Flat Washer	16
5B	1403563	Belt Guide Inner Roller (Long)	8
5C	1403564	Belt Guide Outer Roller (Long)	8
5D	Z23-10	M10 Locknut	8

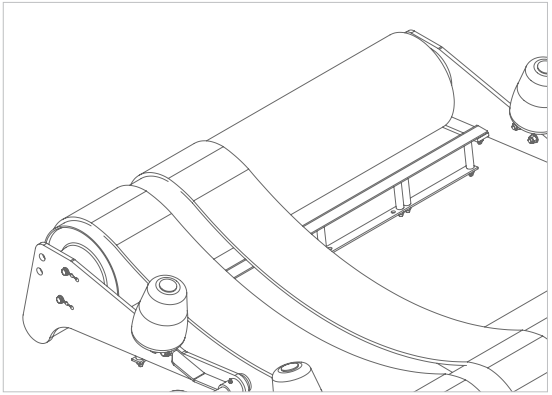

3. Table Assermbly
3.1 Chain Drive
3.2 Roller / Bearing Covers
3.3 Front Belt Guides
3.4 Rear Belt Guides
3.5 Bale Rollers
3.6 Table Pins (1)
3.7 Table Pins (2)
3.8 Loading Arm

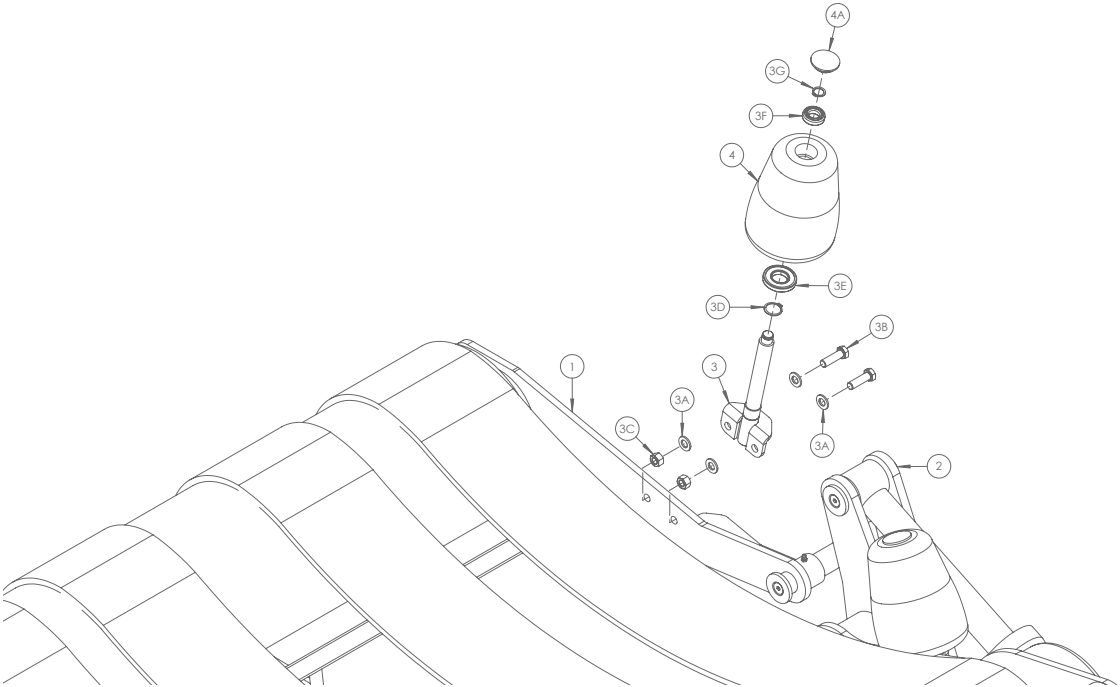

3.5 Bale Rollers

Item No	Part No	Description	Qty
1	1403450	Table Unload Frame	1
2	1403300	Table - Load Frame	1
3	1403055	Bale Roller Shaft Assembly	1
3A	Z10-02-12	M12 Flat Washer	4
3B	Z26-084S	M12 x 40mm Hex Set	2
3C	Z23-12	M12 Locknut	2
3D	Z28-525	25mm External Circlip	1
3E	Z06-AWRB	Ball Bearing (6205-ZZ LDK)	1
3F	34320515	Ball Bearing (6003 2RS)	1
3G	34240713	17mm External Cir Clip	1
4	34340106	Bale Roller	1
4A	Z32-15F	1 1/4" Plastic Cap	1

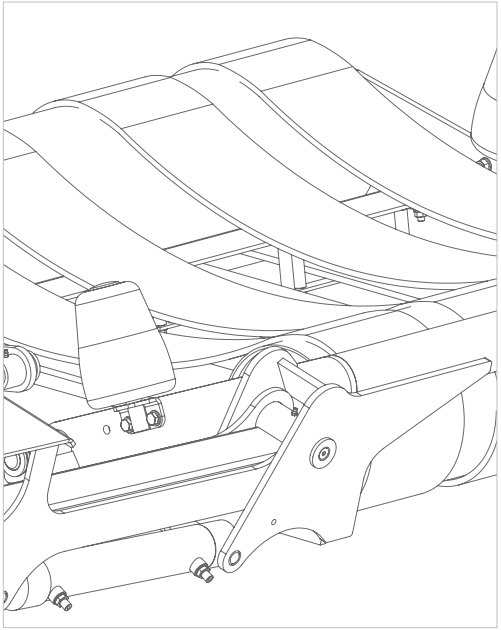

3. Table Assermbly
3.1 Chain Drive
3.2 Roller / Bearing Covers
3.3 Front Belt Guides
3.4 Rear Belt Guides
3.5 Bale Rollers
3.6 Table Pins (1)
3.7 Table Pins (2)
3.8 Loading Arm

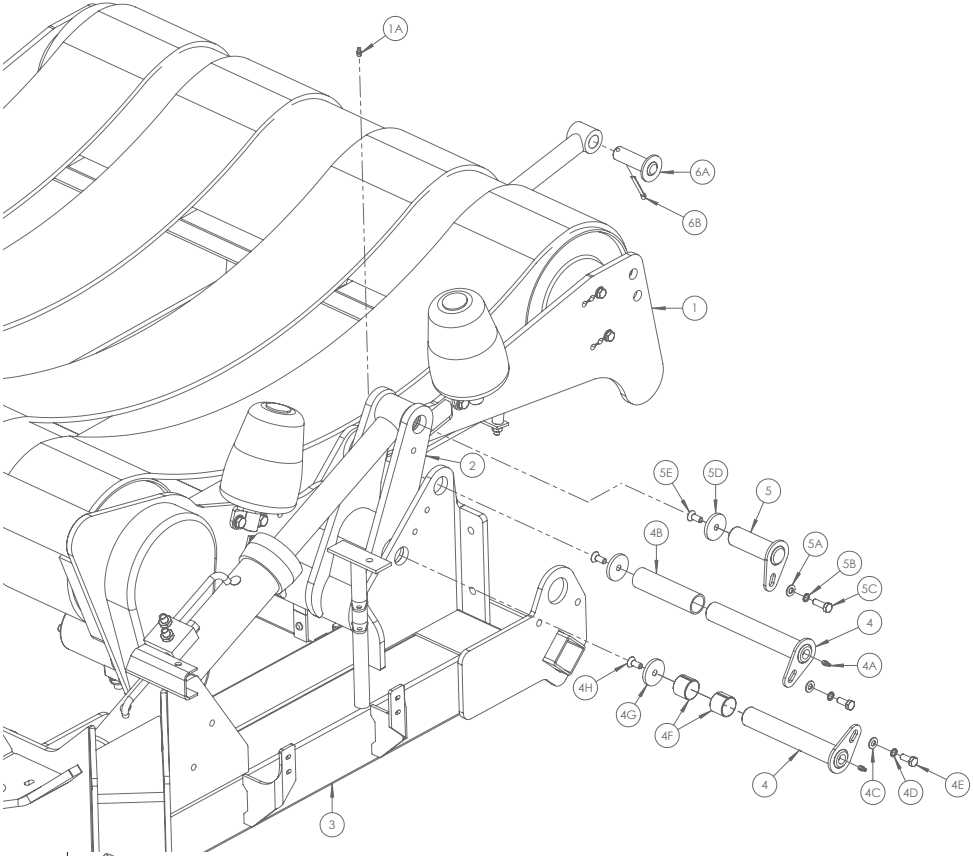

3.6 Table Pins (1)

Item No	Part No	Description	Qty
1	1403450	Table - Unload Frame	1
1A	34060800	M8 x 1.25 Grease Nipple	1
2	1403300	Table - Load Frame	1
3	1401100	Chassis	1
4	1401700	Table Pivot Pin	2
4A	1403052	Pin / Ram Spacer	1
4B	34060800	M8 x 1.25 Grease Nipple	2
4C	Z10-02-10	M10 Flat Washer	2
4D	Z12-02-10	M10 Spring Washer	2
4E	Z26-0611S	M10 x 25mm Hex Set	2
4F	1404055	DX Bush (35mm Bore x 30mm)	2
4G	1403033	Counter Sunk Pin Cap	2
4H	Z13-5-10X25	M10 x 25mm C.S.K Set Allen	2
5	1401706	Ram Mounting Pin	1
5A	Z10-02-10	M10 Flat Washer	1
5B	Z12-02-10	M10 Spring Washer	1
5C	Z26-062S	M10 x 30mm Hex Set	1
5D	1403033	Counter Sunk Pin Cap	1
5E	Z13-5-10X25	M10 x 25mm C.S.K Set Allen	1

Item No	Part No	Description	Qty
6	1408165	Unloading Damper Ram	1
6A	1401722	Ram Mounting Pin	1
6B	Z03-21-29	1/4" Linch Pin	1

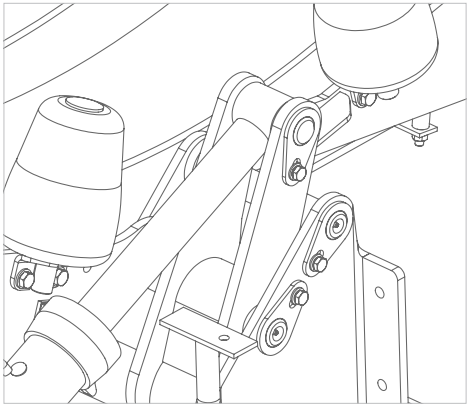

3. Table Assermbly
3.1 Chain Drive
3.2 Roller / Bearing Covers
3.3 Front Belt Guides
3.4 Rear Belt Guides
3.5 Bale Rollers
3.6 Table Pins (1)
3.7 Table Pins (2)
3.8 Loading Arm

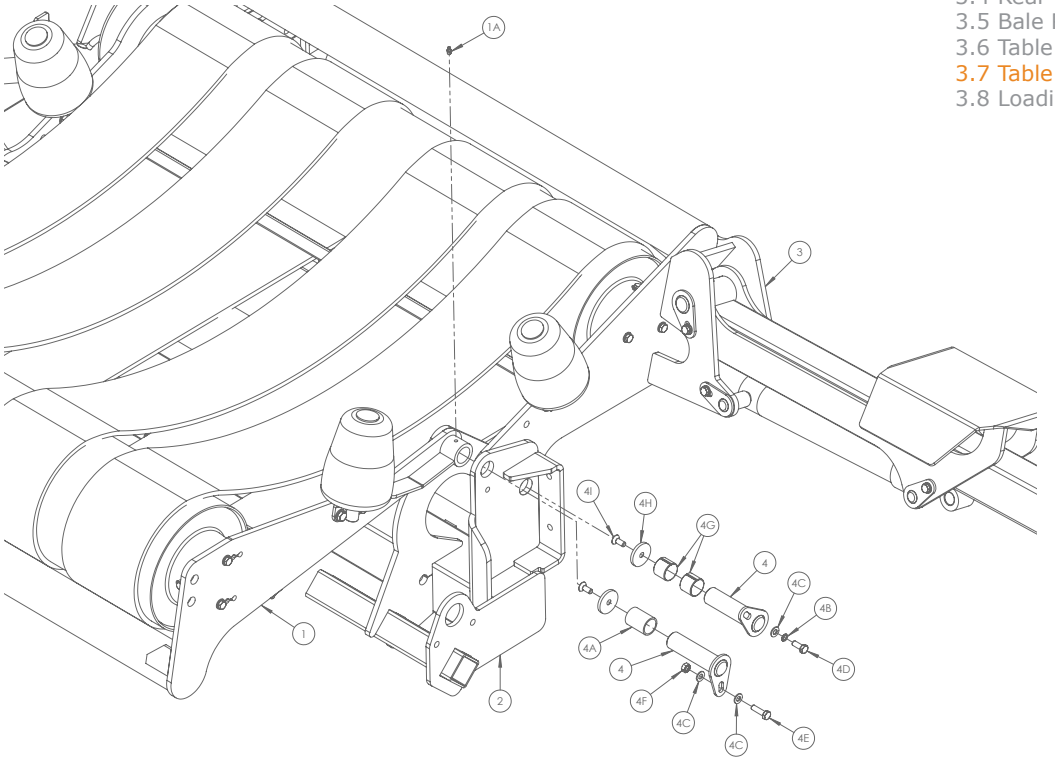

3.7 Table Pins (2)

Item No	Part No	Description	Qty
1	1403450	Table - Unload Frame	1
1A	34060800	M8 x 1.25 Grease Nipple	1
2	1403300	Table - Load Frame	1
2A	34060800	M8 x 1.25 Grease Nipple	1
3	1401100	Chassis	1
4	1401704	Table Pivot Pin	2
4A	1403051	Pin / Ram Spacer	1
4B	Z10-02-10	M10 Flat Washer	3
4C	Z12-02-10	M10 Spring Washer	1
4D	Z26-0611S	M10 x 25mm Hex Set	1
4E	Z26-063S	M10 x 35mm Hex Set	1
4F	Z23-10	M10 Locknut	1
4G	1404055	DX Bush (35mm Bore x 30mm)	2
4H	1403033	Counter Sunk Pin Cap	1
4I	Z13-5-10X25	M10 x 25mm C.S.K Set Allen	1

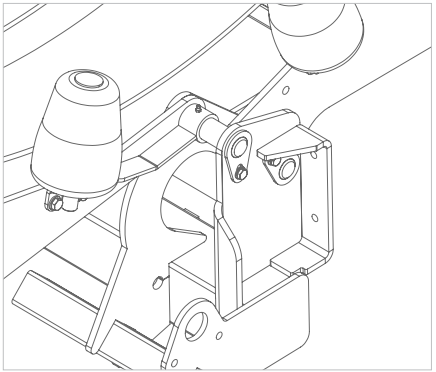

3. Table Assermbly
3.1 Chain Drive
3.2 Roller / Bearing Covers
3.3 Front Belt Guides
3.4 Rear Belt Guides
3.5 Bale Rollers
3.6 Table Pins (1)
3.7 Table Pins (2)
3.8 Loading Arm

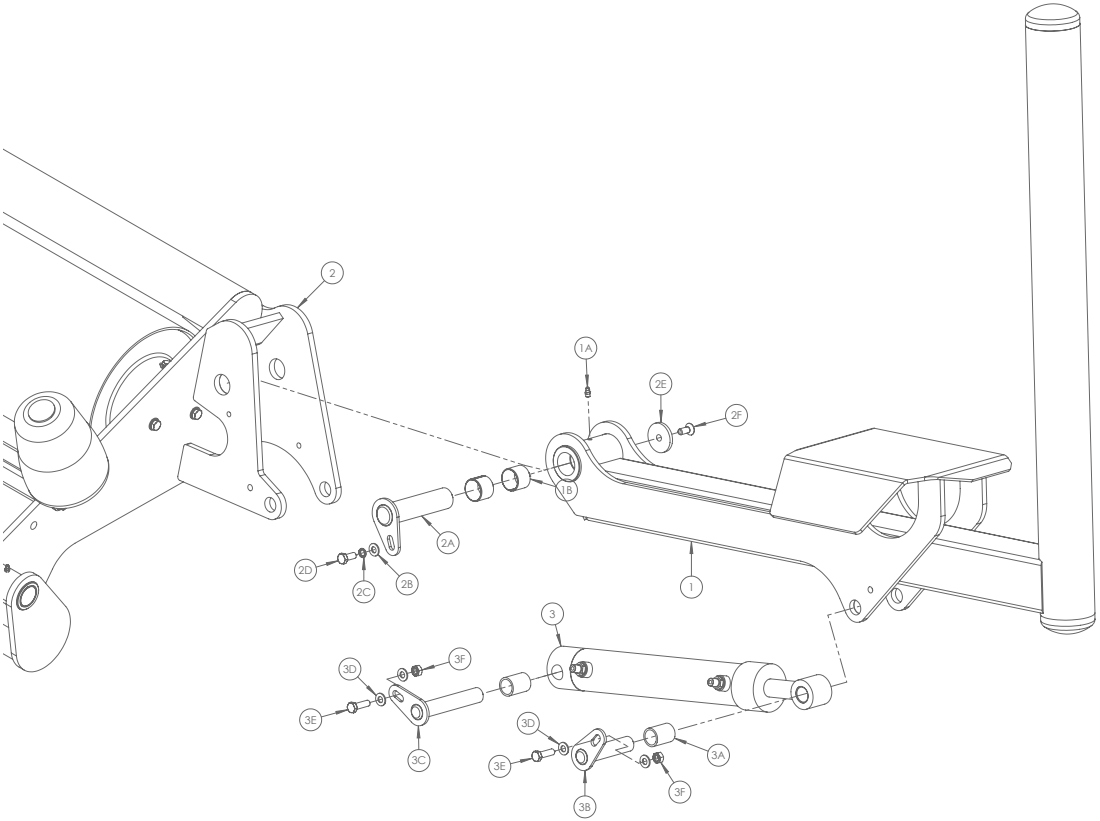

3.8 Loading Arm

Item No	Part No	Description	Qty
1	1402110	Loading Arm	1
1A	34060800	M8 x 1.25 Grease Nipple	1
1B	1404055	DX Bush (35mm Bore x 30mm)	2
2	1403300	Table Load Frame	1
2A	1401708	Loading Arm Pivot Pin	1
2B	Z10-02-10	M10 Flat Washer	2
2C	Z12-02-10	M10 Spring Washer	2
2D	Z26-0611S	M10 x 25 Hex Set	2
2E	1403033	Counter Sunk Pin Cap	2
2F	Z13-5-10X25	M10 x 25 C.S.K Set Allen	2
3	1408168	Loading Arm Ram	1
3A	1403053	Pin / Ram Spacer	2
3B	1401716	Ram Pin A	1
3C	1401718	Ram Pin B	1
3D	Z10-02-10	M10 Flat Washer	4
3E	Z26-063S	M10 x 35 Hex Set	2
3F	Z23-10	M10 Locknut	2

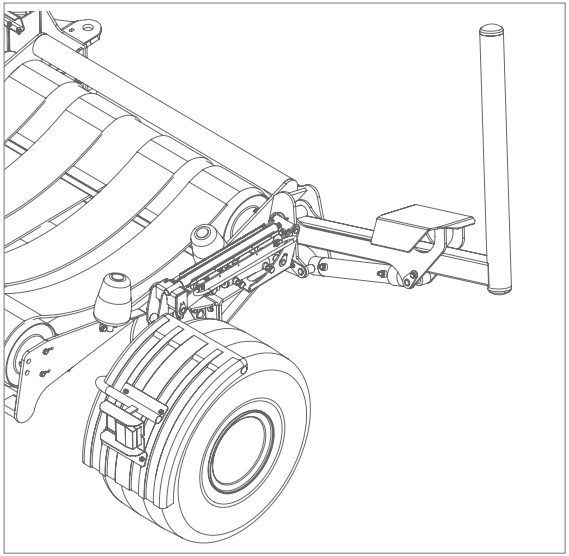

4. Tower Assembly
4.1 Tower Mounting
4.2 Wrapping Arm
4.3 Safety Arm
4.4 Tower Motor
4.5 Wrap Arm Mounting
4.6 Wrap Arm Drive

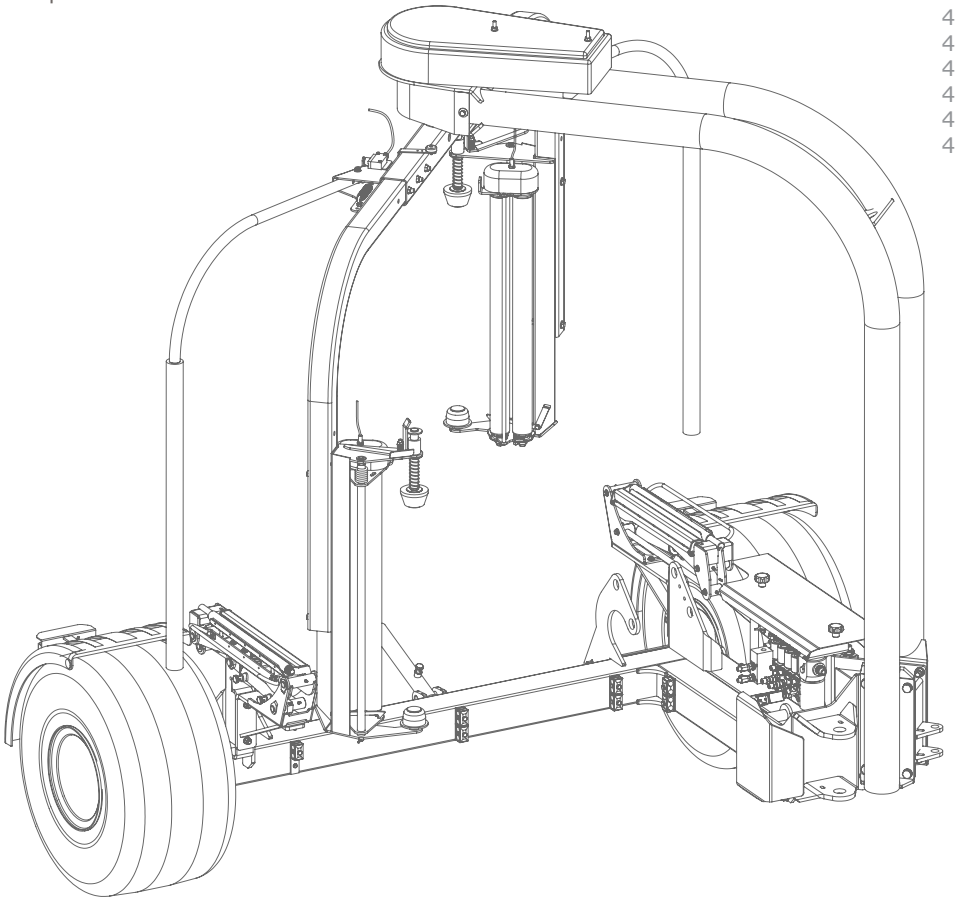

4. Tower Assembly
4.1 Tower Mounting
4.2 Wrapping Arm
4.3 Safety Arm
4.4 Tower Motor
4.5 Wrap Arm Mounting
4.6 Wrap Arm Drive

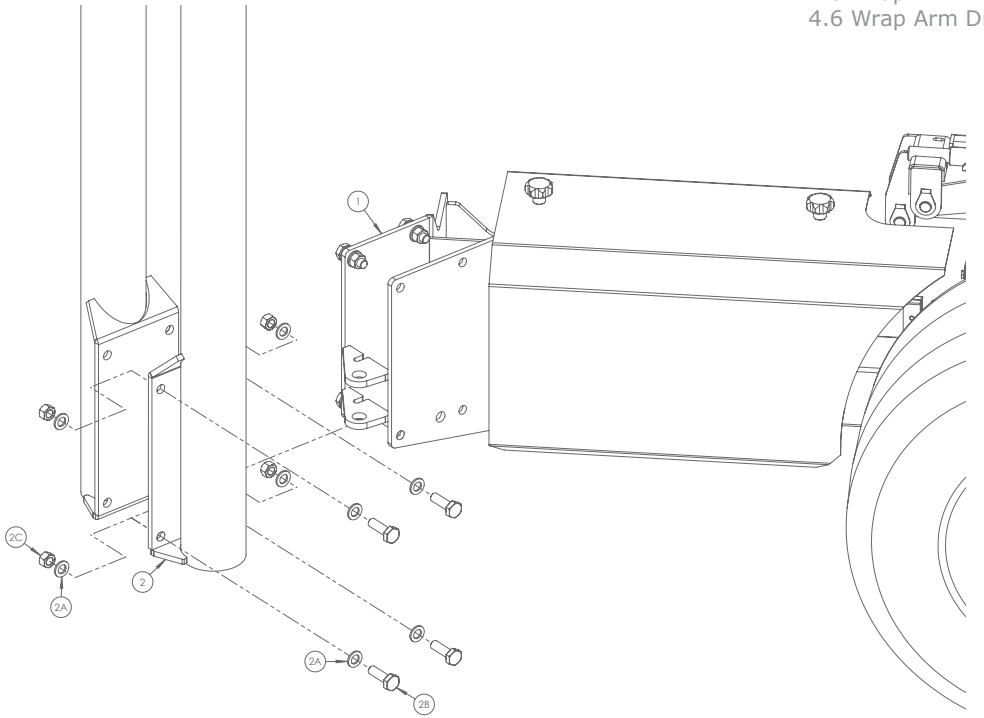

Item No	Part No	Description	Qty
1	1401100	Chassis	1
2	1404400	Tower	1
2A	Z10-02-16	16mm Flat Washer	8
2B	Z13B-064	5/8" x 2" UNF Hex Set	4

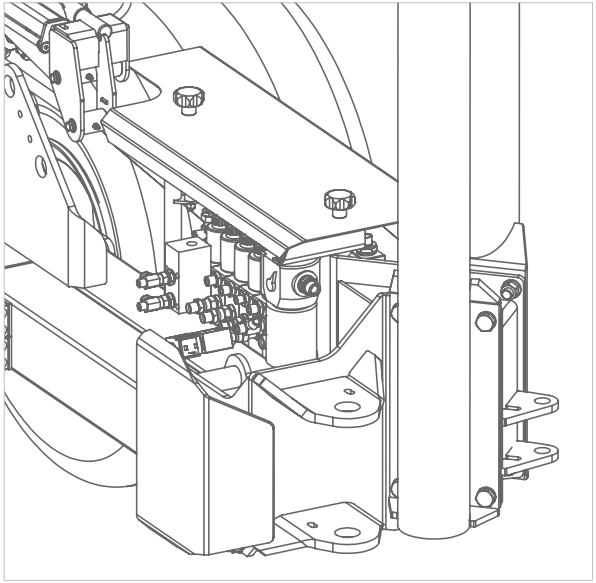

4. Tower Assembly
4.1 Tower Mounting
4.2 Wrapping Arm
4.3 Safety Arm
4.4 Tower Motor
4.5 Wrap Arm Mounting
4.6 Wrap Arm Drive

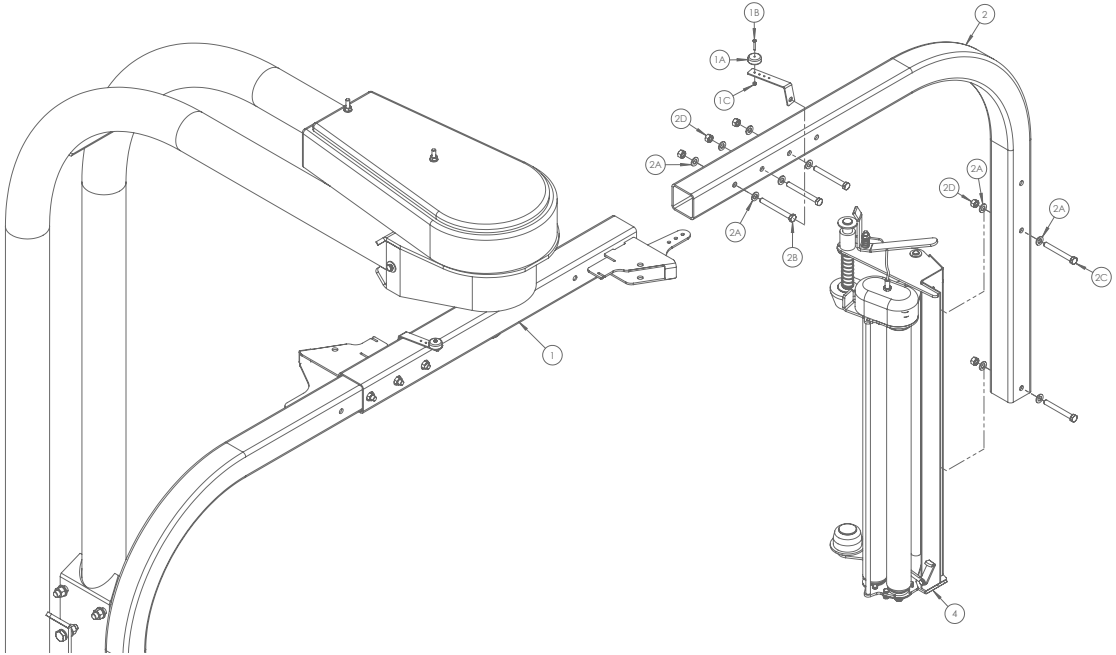

4.2 Wrapping Arm

Item No	Part No	Description	Qty
1	1404220	Wrapping Arm	1
1A	1309201	Sensor Magnet	1
1B	Z13-5-04X30	M4 x 30mm CSK AH Set	1
1C	Z23-04	4mm Locknut	1
2	1404009	Dispenser Mounting Arm	1
2A	Z10-02-12	12mm Flat Washer	10
2B	Z23-093B	M12 x 110mm Hex Bolt	3
2C	Z26-092S	M12 x 100mm Hex Set	2
2D	Z23-12	12mm Locknut	5
3	1405150	Dispenser Assembly	1

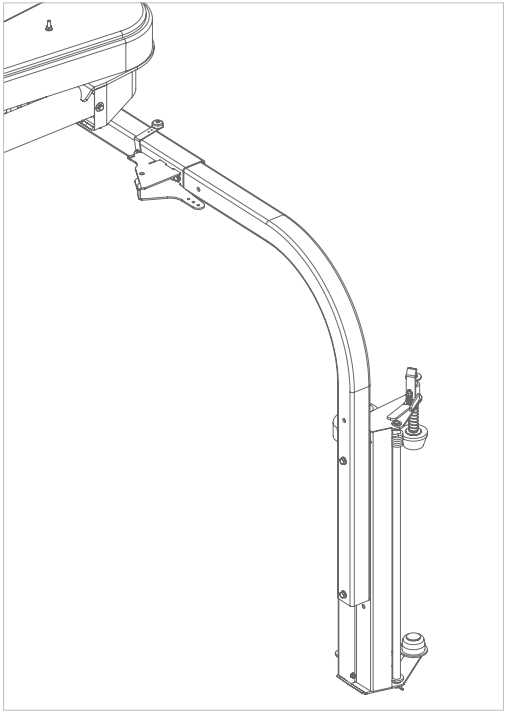

4. Tower Assembly
4.1 Tower Mounting
4.2 Wrapping Arm
4.3 Safety Arm
4.4 Tower Motor
4.5 Wrap Arm Mounting
4.6 Wrap Arm Drive

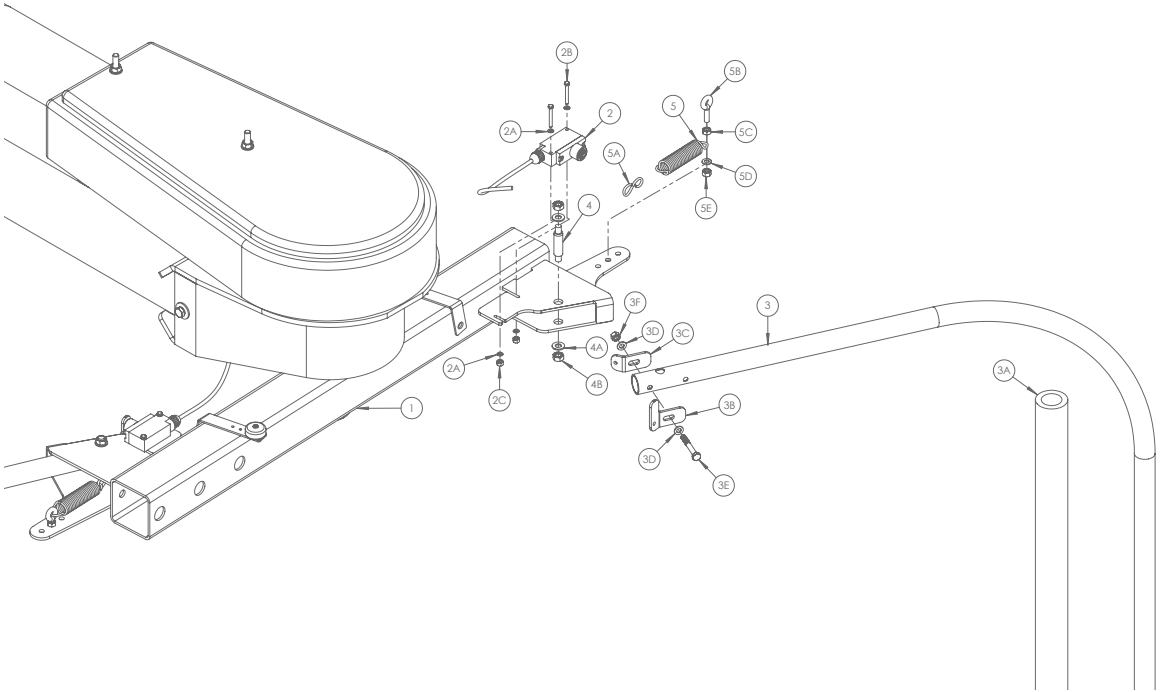

4.3 Safety Arm

Item No	Part No	Description	Qty
1	1404220	Rotating Arm	1
2	34950179	Safey Switch	1
2A	Z10-02-05	5mm Flat Washer	4
2B	Z26-0137S	M5 X 40 Set	2
2C	Z23-05	5mm Locknut	2
3	34611357	Emergency Stop Arm	1
3A	34480020	Emergency Stop Arm Cover	1
3B	1404013	Switch Activator	1
3C	34670152	Emergency Stop Arm Bracket	1
3D	Z10-02-08	8mm Flat Washer	2
3E	Z26-047B	M8 x 60mm Hex Bolt	1
3F	Z23-08	8mm Locknut	1
4	34105651	Emergency Stop Arm Pivot Bolt	1
4A	Z10-02-10	10mm Flat Washer	2
4B	Z23-10	10mm Locknut	2

Item No	Part No	Description	Qty
5	34430300	Emergency Stop Arm Spring	1
5A	34660111	Emergency Stop Arm S Hook	1
5B	34119043	Eye Bolt (M8 x 25mm)	1
5C	Z18-08	8mm Plain Hex Nut	1
5D	Z10-02-08	8mm Flat Washer	1
5E	Z23-08	8mm Locknut	1

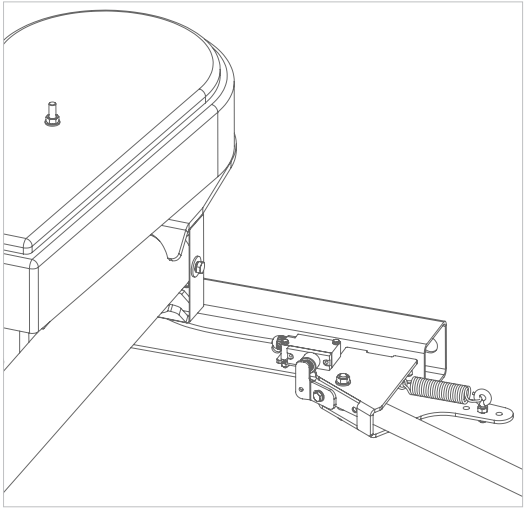

4. Tower Assembly
4.1 Tower Mounting
4.2 Wrapping Arm
4.3 Safety Arm
4.4 Tower Motor
4.5 Wrap Arm Mounting
4.6 Wrap Arm Drive

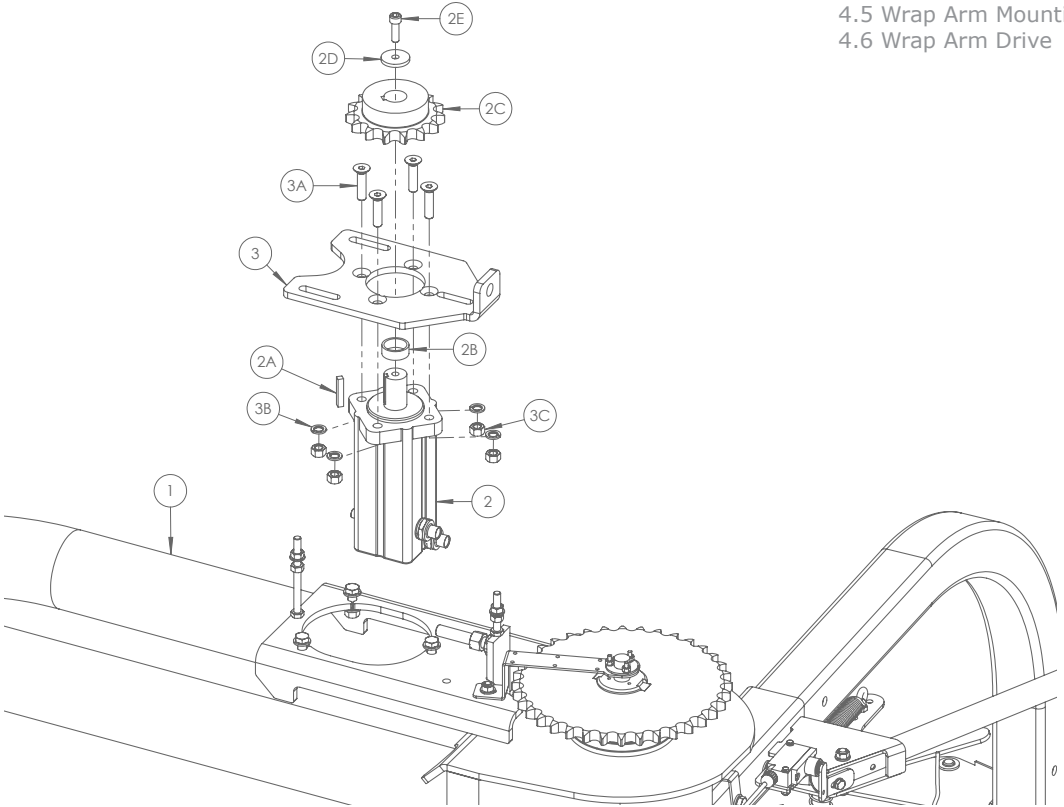

4.4 Tower Motor

Item No	Part No	Description	Qty
1	1404400	Tower	1
2	Z01-02-RF200	Tower Motor	1
2A	1503172	Motor Spacer	1
2B	Z06-I60-046	15 Tooth 1" Sprocket	1
2C	WD623-071	1 1/2" Collar	1
2D	Z13-4-32	1 1/4" x 3/8"UNC Socket Cap SC	1
3	1503247	Motor Mounting Plate	1
3A	Z13-5-12X50	M12 x 50 C.S.K. Allen Set	4
3B	Z12-02-12	12mm Spring Washer	4
3C	Z23-12	12mm Locknut	4

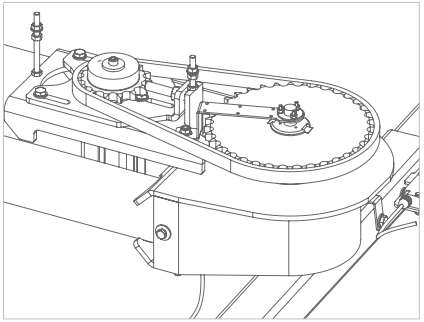

4. Tower Assembly
4.1 Tower Mounting
4.2 Wrapping Arm
4.3 Safety Arm
4.4 Tower Motor
4.5 Wrap Arm Mounting
4.6 Wrap Arm Drive

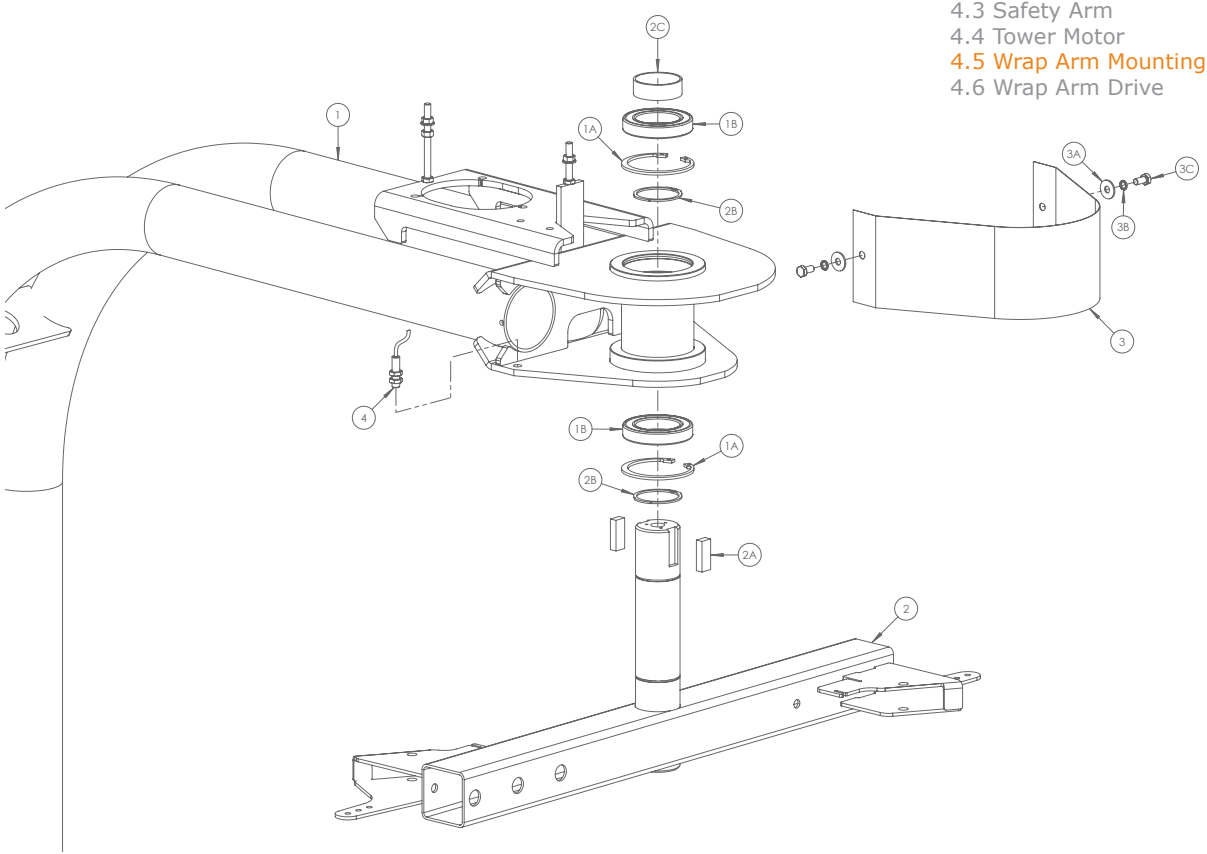

4.5 Wrap Arm Mounting

Item No	Part No	Description	Qty
1	1404400	Tower	1
1A	1404051	Internal Circlip (Dia 110mm)	2
1B	1404052	Shaft Bearing (6014 2RS)	2
2	1404220	Rotating Arm	1
2A	1404024	Key Steel 20 X 12 X 50	2
2B	1404053	External Circlip (Dia 67mm)	2
2C	1403075	Drive Shaft / Sprocket Spacer	1
3	1404076	Front Guard	1
3A	Z11-02-101	3/8" x 1" Mud Washer	2
3B	Z10-02-10	10mm Spribng Washer	2
3C	Z26-060S	M10 x 20mm Hex Set	2
4	1309201	Sensor Magnet	1

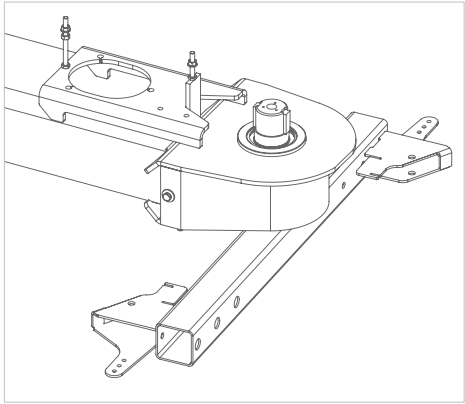

4. Tower Assembly
4.1 Tower Mounting
4.2 Wrapping Arm
4.3 Safety Arm
4.4 Tower Motor
4.5 Wrap Arm Mounting
4.6 Wrap Arm Drive

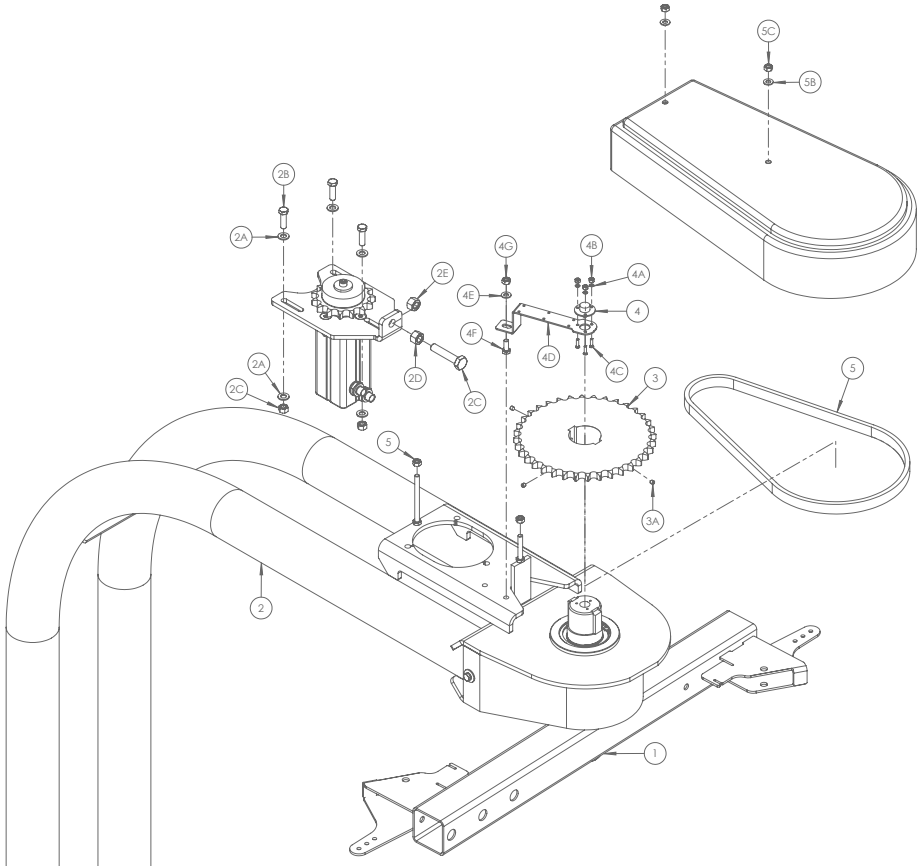

4.6 Wrap Arm Drive

Item No	Part No	Description	Qty
1	1404220	Rotating Arm	1
2	1404400	Tower	1
2A	Z10-02-12	12mm Flat Washer	6
2B	Z26-084S	M12 x 40mm Hex Set	3
2C	Z23-12	12mm Locknut	3
2D	Z26-1291S	M16 x 80mm Hex Set	1
2E	Z18-16	16mm Plain Hex Nut	1
2F	Z23-16	16mm Locknut	1
3	1404010	36 Tooth 1" BS Sprocket	1
3A	Z28-008	M8 x 10mm Grub Screw	3
4	1809010	6 Way Slip Ring	1
4A	Z10-02-05	5mm Flat Washer	3
4B	Z13-022	M5 x 20mm CSK AH Set	3
4C	Z23-05	5mm Locknut	3
4D	1403119	Slip Ring Bracket	1
4E	Z10-02-10	10mm Flat Washer	1
4F	Z26-0611S	M10 x 25mm Hex Set	1
4G	Z23-10	10mm Locknut	1

Item No	Part No	Description	Qty
5	Z09-AW9	1" BS Chain	1
5A	1404450	Tower Chain Guard	1
5B	Z10-02-10	10mm Flat Washer	2
5C	Z23-10	10mm Locknut	2
5D	Z18-10	10mm Plain Hex Nut	2

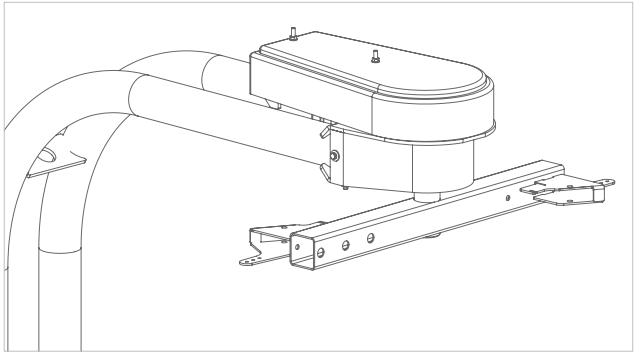

5. Dispenser Assembly
5.1 Dispenser Insert
5.2 Dispenser Complete

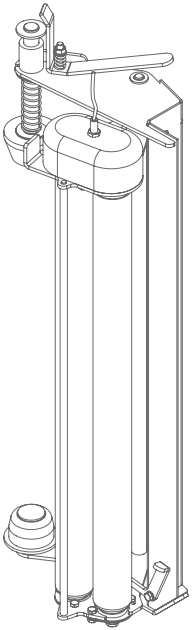

5. Dispenser Assembly
5.1 Dispenser Insert
5.2 Dispenser Complete

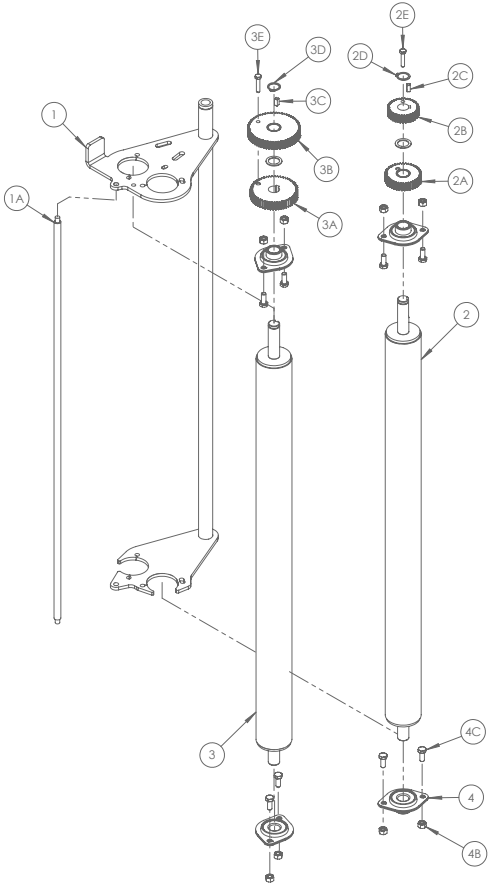

5.1 Dispenser Insert

Item No	Part No	Description	Qty
1	1505001	Roller Mounting Frame	1
1A	1305035	Film Seperating Roller	1
2	1305120	Inner Roller	1
2A	1305104	37 Tooth Gear	1
2B	1305102	35 Tooth Gear	1
2C	1305123	6mm Square Key Steel (15mm Long)	1
2D	Z28-520	20mm External Cir-Clip	1
2E	Z26-022S	M6 x 30mm Hex Set	1
3	1305121	Outer Roller	1
3A	1305101	60 Tooth Gear	1
3B	1305103	58 Tooth Gear	1
3C	1305123	6mm Square Key Steel (15mm Long)	1
3D	Z28-520	20mm External Cir-Clip	1
3E	Z26-022S	M6 x 30mm Hex Set	1
4	1305122	Roller Bearing (SLFL20A)	4
4A	Z26-039S	M8 x 20mm Hex Set	8
4B	Z23-08	8mm Locknut	8

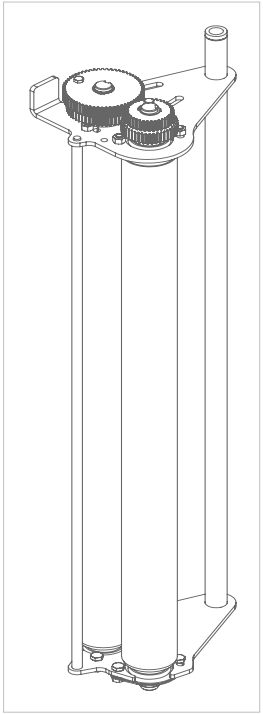

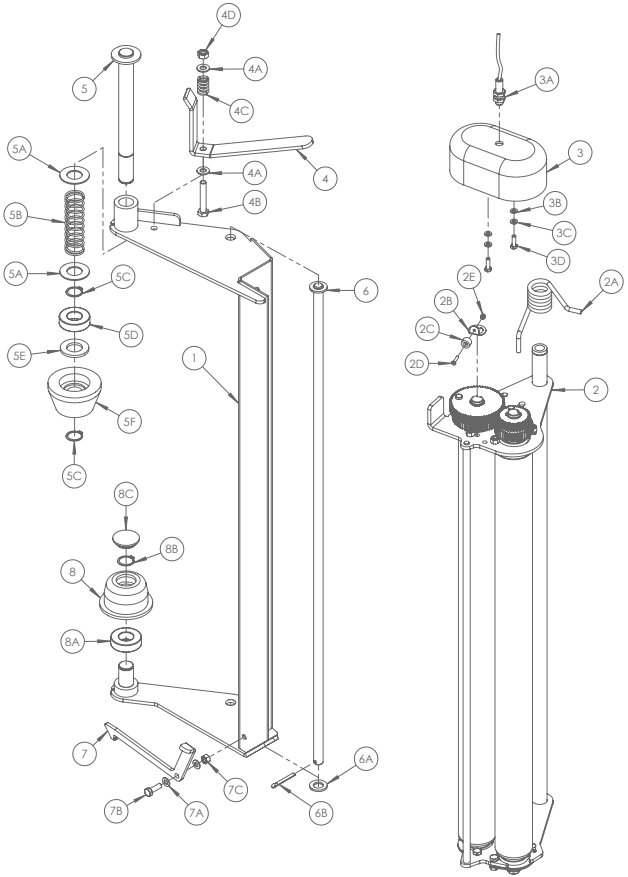
4D
4A
4C
5
5A
4A
4
4B
5B
5A
5C
6
5D
5E
1
5F
5C
8C
8B
8
8A
7
6A
7C
7B
7A
6B
3A
3
3B
3C
3D
2E
2A
2B
2C
2D
2

5.2 Dispenser Complete

Item No	Part No	Description	Qty
1	1405100	Dispenser Frame	1
2	1305100B	Dispenser Insert (70/55%)	1
2A	1305034	Torsion Spring	1
2B	WD404-052	Magnet Mounting Bracket	1
2C	D606C-M	Sensot Magnet	1
2D	Z13-5-04X20	M4 x 20mm CSK Set	1
2E	Z23-04	4mm Locknut	1
3	1305125	Dispenser Gearbox Cover	1
3A	1309203	RDS Sensor (4m Cable)	1
3B	Z10-02-06	6mm Flat Washer	2
3C	Z12-02-06	6mm Spring Washer	2
3D	Z26-020S	M6 x 20mm Hex Set	2
4	1305026	Dispenser Top Latch	1
4A	Z10-02-10	10mm Flat Washer	2
4B	Z26-067B	M10 x 60mm Hex Bolt	1
4C	1305027	Top Latch Compression Spring	1
4D	Z23-10	10mm Locknut	1

Item No	Part No	Description	Qty
5	1305022	Dispenser Top Shaft	1
5A	Z11-02-25	25mm Flat Washer (Light Duty)	2
5B	1305021	Compression Spring	1
5C	Z28-525	25mm External Circlip	2
5D	Z06-AWRB	Ball Bearing (6205-ZZ LDK)	1
5E	Z10-02-25	25mm Flat Washer (Heavy Duty)	1
5F	1305019	Top Nylon Cone	1
6	1405007	Insert Mounting Pin	1
6A	Z10-02-16	16mm Flat Washer	1
6B	Z03-21-14	3/16" Split Pin (1 1/2" Long)	1
7	1405151	Dispenser Bottom Latch	1
7A	Z10-02-08	8mm Flat Washer	2
7B	Z26-040B	M8 x 25mm Hex Bolt	1
7C	Z23-08	8mm Locknut	1
8	1405006	Bottom Nylon Cone	1
8A	Z06-AWRB	Ball Bearing (6205-ZZ LDK)	1
8B	Z28-525	25mm External Circlip	1
8C	Z32-15F	1 1/4" NB Tube Insert (37mm)	1

6. Controller Mounting Assembly

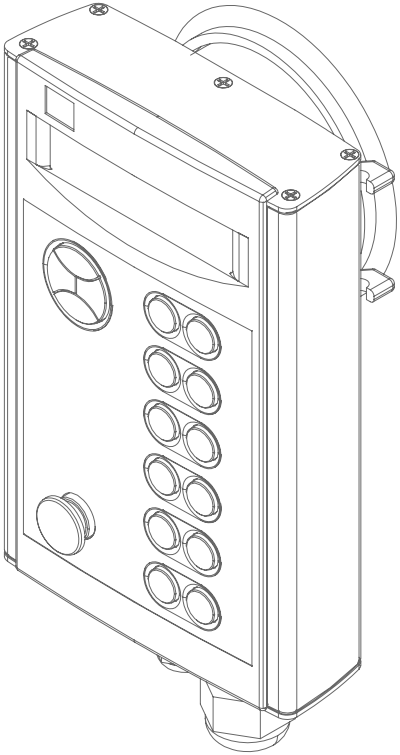

6. Controller Mounting Assembly

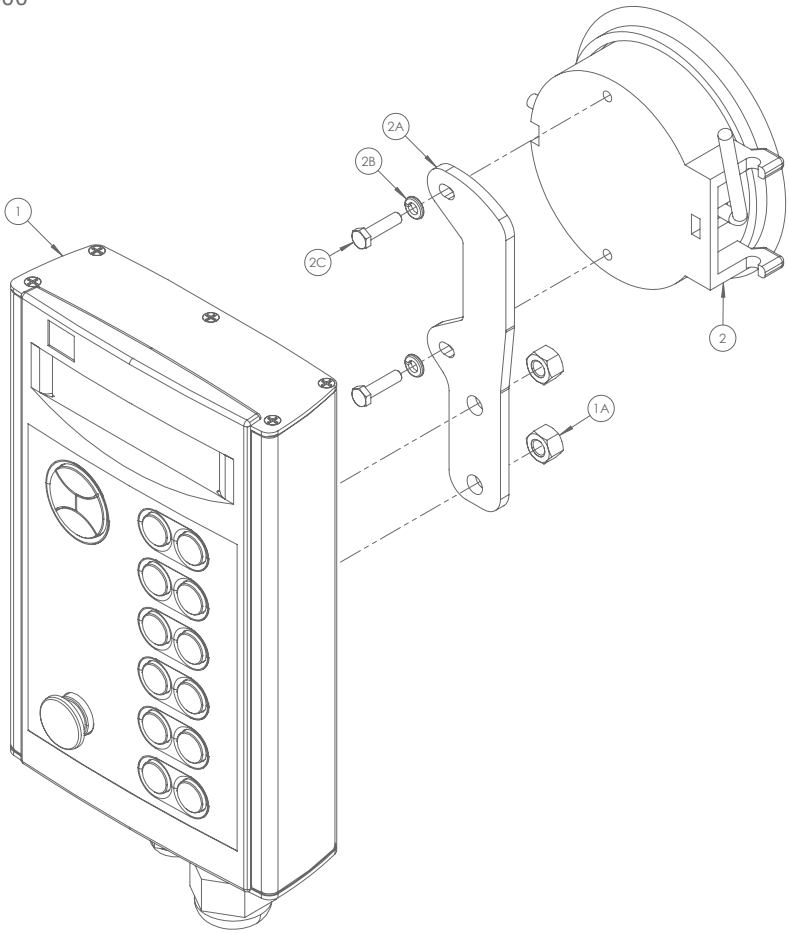

Tanco Autowrap - 1400
Parts List

6. Controller Mounitng Assembly
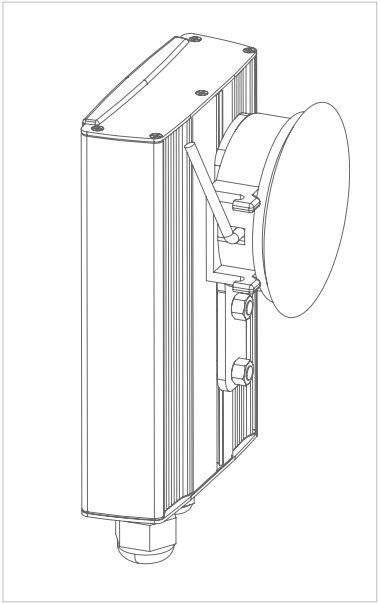
Item No	Part No	Description	Qty
1	1409150	1400 Expert Control Unit	1
1A	Z23-08	8mm Locknut	2
2	1309012	Controller Suction Cup	1
2A	1309011	Sucntion Cup Mounting Bracket	1
2B	Z12-02-05	5mm Spring Washer	2
2C	Z26-017S	M5 x 20mm Hex Set	2